BUCKLEY FENCE INSTALLER MANUAL

BUCKLEY
FENCE

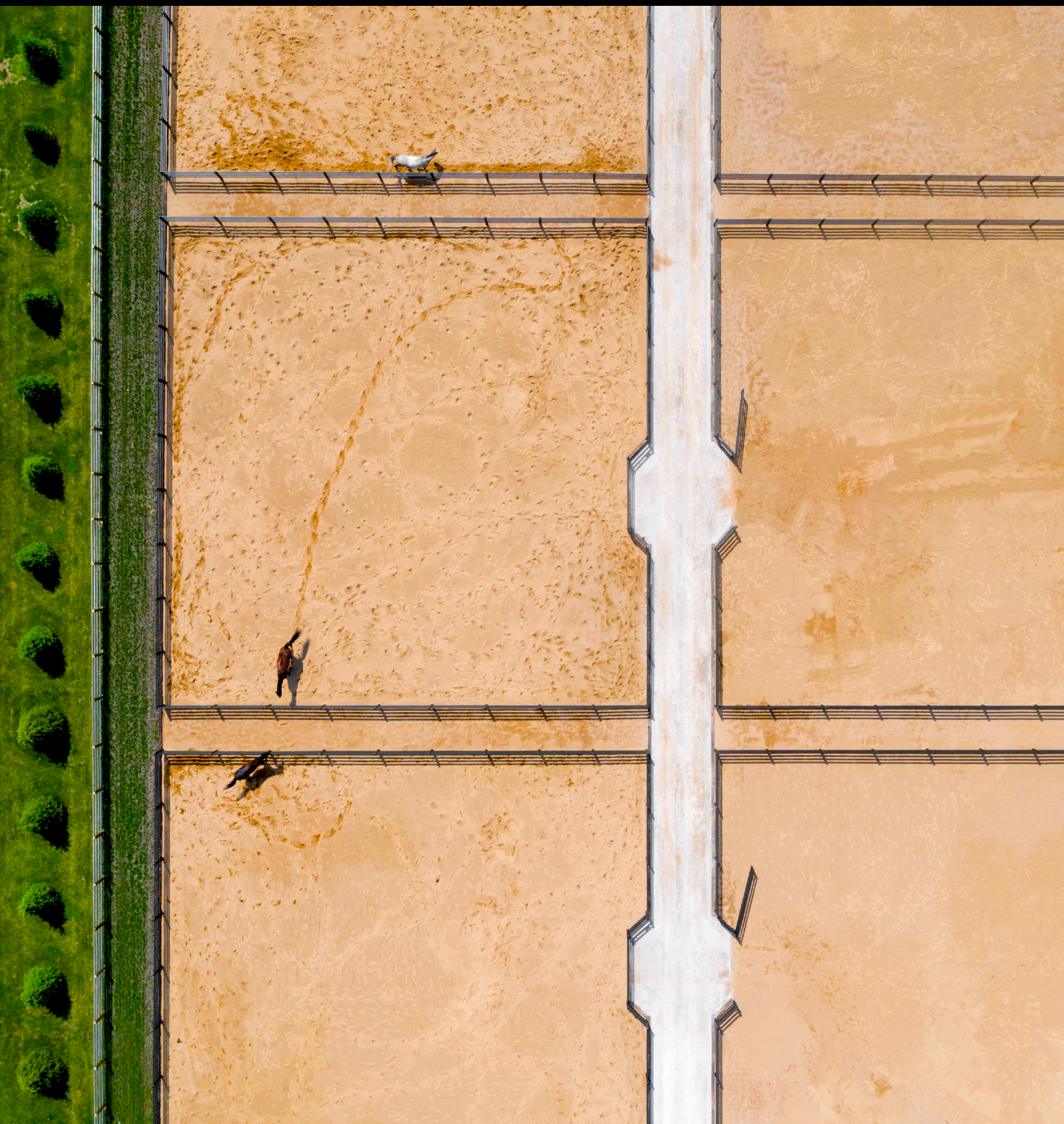

BUCKLEY
FENCE

Thank you so much for your purchase! This manual will walk you through how to install Buckley Fence along with all other accompanying accessories. Please do not hesitate to call us at 720-644-6884 if you have any questions about installation.

TABLE OF CONTENTS

TRUCK UNLOADING TIPS

INSTRUCTION ON PROPER UNLOAD OF YOUR BUCKLEY FENCE SHIPMENT

Our steel posts and rails are packed in steel crate ends with plastic mats, cardboard covers, and band strapping. Each post and rail comes individually wrapped in a poly bag for protection. Buckley Fence ships via standard dry van semi-trailers for standard installs. You get two hours of free unloading time and will be charged $75 per extra hour that is beyond that time limit.

REQUIRED MATERIALS

1. Tractor, fork truck, or skid steer with load rating for 5,000+ lbs
2. 55 feet of heavy duty nylon strapping with load capacity of 10,000+ lbs
3. 6 ft forks or 6 ft extensions on standard forks (call us for recommendations if standard forks are to be used)

1 UNLOADING CRATES

1. Assure the trailer has space to park on level ground. If the ground is not level, roll the trailer up on ramps to level it out before unloading.
2. Crates are stacked as tall as three high. (In this case, 3 stacked rail crates weigh up to 5,000 lbs and post crates weigh 2,160 lbs). Remove the lowest weight stack first, as it has less resistance to sliding than heavier stacks.
3. Loop the nylon strapping around the bottom of the crate on the far side. 55 feet of strapping will ensure reach to the farthest crates. This is critical to successful unloading. **Use only nylon strapping, no steel chains. This is for safety in case of a break of the straps while pulling.**
4. Either hook the nylon strapping to the fork lift with steel hooks or loop the straps around the forks.
5. Remove crates from the door end one at a time and stage them for the job. Crates can be field stacked on hard, flat surfaces or on level concrete up to 3 high for both post and rail crates. If on an uneven field, post and rail crates can be stacked up to 2 high.
6. Crate ends should never contact the adjacent stacked goods during movement since this can cause the crate ends to catch each other. This can cause the crate end to contact and damage the product.
7. After removing the crates nearest the doors, you will then need to slide stacks of crates toward the door for unloading.
    a. Warning: No one should be in the trailer while sliding the crates as this may cause injury or death.
8. Since access to the far side of the crate stacks can be tricky, you can hook to the center of the crate only on post crates (NOT heavy rail crate stacks). Only do this if there is no other choice.
    a. This can cause band breakage. Be ready to stop quickly if a band breaks to prevent full crate detachment from the load.

2 UNLOADING GATE PALLETS

Our gates are sent on reusable steel pallets and are unloaded similarly to our crates. Gate pallets can be 13 feet long, and have a maximum weight of only 1000 pounds. Please be aware that gates have less headroom in the truck when stacked 2 high.

1. Lifting is done by just an inch or two on the fork end, then tilting the forks back to level the gates within the truck.
2. Slowly ease out with the top gate pallet. Adjust the level of the load to assure you clear both the roof and the load below.

NOTES

All steel crate ends and gate pallets, along with plastic mats and pallet parts, are to be collected, stacked and returned with freight paid by Buckley. We have a packing procedure for optimum return loading; please reference page 43 and page 46 of this installation manual for instruction on crate and gate pallet return.

If you have any questions on how to unload just give us a call at 720-644-6884.

FENCE DIMENSIONS

3 RAIL & 4 RAIL FENCE DIMENSIONS AND SPECS FOR INSTALL

3 Rail Steel Board Fence Dimensions

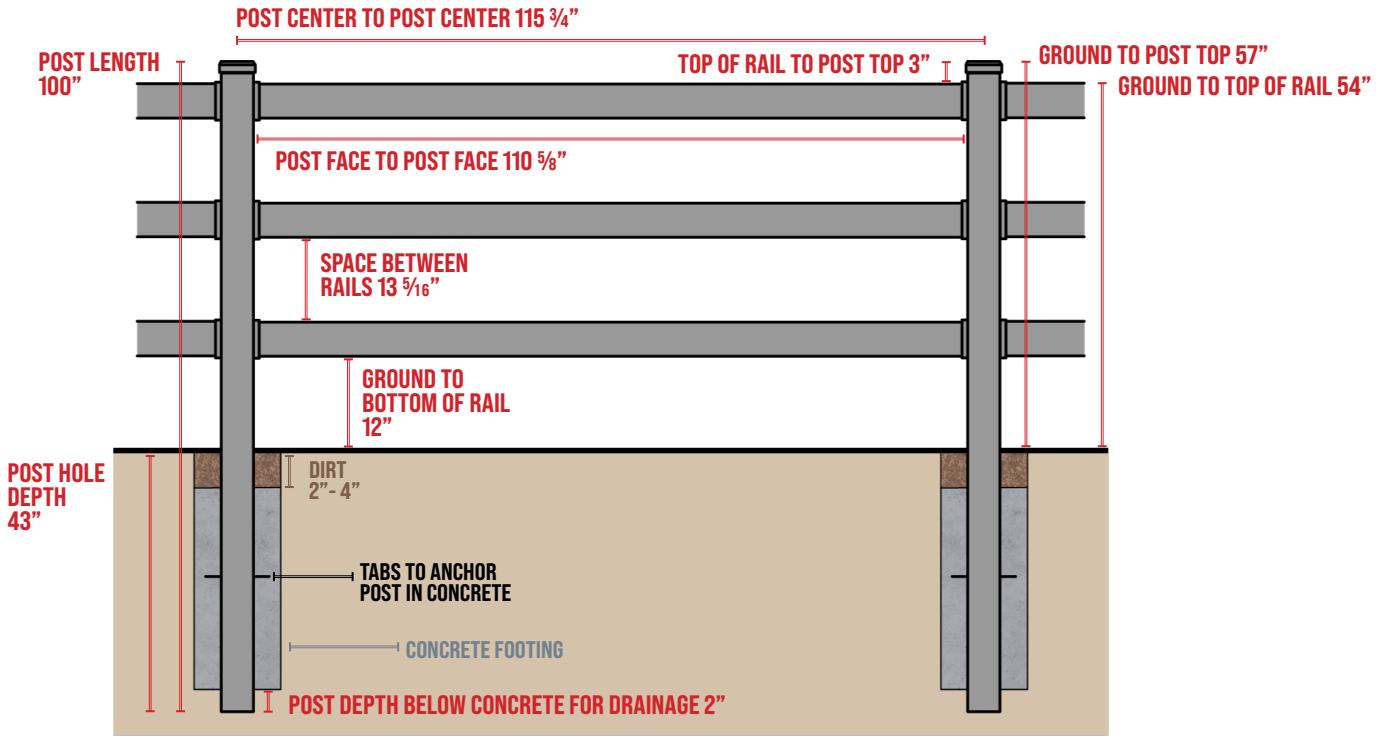

4 Rail Steel Board Fence Dimensions

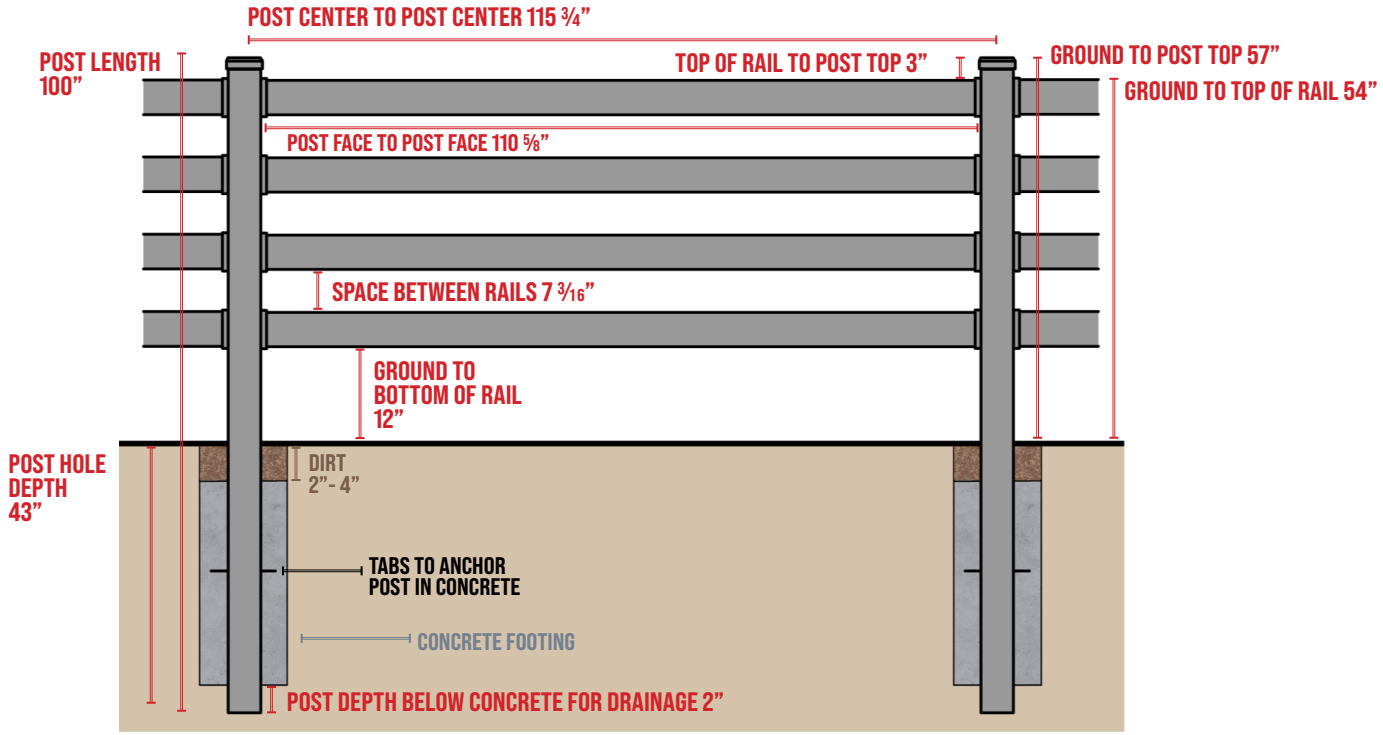

POST CENTERS

BUCKLEY FENCE POST CENTERS

Post center to post center measurements are used to measure post hole placements in the field.

Use these measurements to mark with spray paint where to use the auger to dig post holes.

POST & RAIL DIMENSIONS

Rail Size

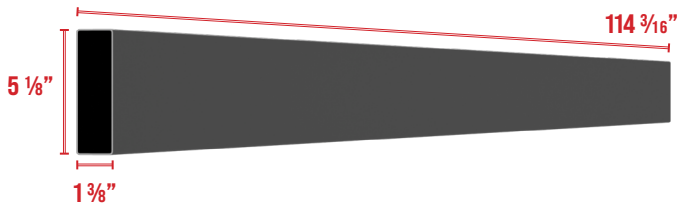

Post Size

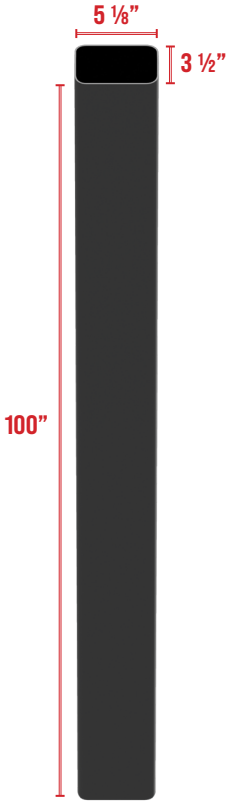

BUCKLEY FENCE POST CENTERS			
Section Number	Feet	Inches	Centers in Exact Total Inches
1	9	7.75	115.75
2	19	3.5	231.5
3	28	11.25	347.25
4	38	7	463
5	48	2.75	578.75
6	57	10.5	694.5
7	67	6.25	810.25
8	77	2	926
9	86	9.75	1041.75
10	96	5.5	1157.5
11	106	1.25	1273.25
12	115	9	1389
13	125	4.75	1504.75
14	135	0.5	1620.5
15	144	8.25	1736.25
16	154	4	1852
17	163	11.75	1967.75
18	173	7.5	2083.5
19	183	3.25	2199.25
20	192	11	2315
21	202	6.75	2430.75
22	212	2.5	2546.5
23	221	10.25	2662.25
24	231	6	2778
25	241	1.75	2893.75
26	250	9.5	3009.5
27	260	5.25	3125.25
28	270	1	3241
29	279	8.75	3356.75
30	289	4.5	3472.5
31	299	0.25	3588.25
32	308	8	3704
33	318	3.75	3819.75
34	327	11.5	3935.5
35	337	7.25	4051.25

FENCE INSTALLATION

BUCKLEY FENCE INSTALLATION WRITTEN INSTRUCTIONS

Buckley Fence components include 5 different post types (line, terminal/end, corner/90°, 3-way/tees, 4-way/cross), rails, lock spacer assemblies, and post caps. The posts have pre-punched rail openings lined with rubber grommets.

Each post is 100” in length and has a tab punched 24” from the bottom that serves to lock the post into the concrete footing. If the post must be shortened, it must be trimmed from the bottom, not the top.

The rails are approximately 9’ 6 3⁄16” in length and have a 23° articulation allowance in any direction, allowing for hilly terrain, round corrals and elegant curves. The lock spacers are inserted in each post and serve to lock the rails in place.

Refer to page 3 of this manual for dimensions and specifications.

Before you get started, make sure to check local codes and permit requirements and contact your local utility companies to check for underground services such as electrical, plumbing, or cable.

REQUIRED MATERIALS

1. Auger with an extension to at least 43”
2. Metal cutting saw (if trimming posts & rails)
3. Tape measure
4. Level
5. Rubber mallet
6. Pliers
7. Wood board cut to 110 5⁄8” for spacing gage
8. Concrete (approximately two 80 lb bags per post hole)
9. String
10. Stakes
11. Towel/rag
12. Cold galvanizing spray

1 SETTING THE POSTS

1. Decide on all the gate placements. Install the end gate posts first. Gates within the fence line are installed during the fence line build. See the Steel Board Gate Installation instructions on page 15 for further information.
2. Plan your layout ahead to avoid cutting rails and having unnecessarily small sections.
3. From the open end of the first gate, set the first fence post at a 3” gap to the gate for proper latch installation.

4. Using an auger with extension, dig post holes 9” in diameter & 43” deep (or deeper) with 115 ¾” between post hole centers on flat ground. Use a line with a clip or marker at exactly 115 ¾” incremental distance.
5. Make sure to bend out the post anchor tab on the bottom of every post (to prevent post movement) before the post is placed in the post hole. Bend out the tabs to at least 45° (and not more than 90°) for anchoring the fence post in the concrete. Use a screwdriver, set of pliers, or channel lock tool.
6. Put the fence post into the hole and use a rubber mallet to tap it into the hole another inch or two. Set the post 43” in the ground and to a height of 57” above ground. Tapping the post down the last inch or two enables drainage to the soil once the concrete is set.
7. Run a string line along the planned fence line at the same 57” height to ensure all posts are set to the same height. Keep in mind the ground will vary a few inches up and down even on a relatively flat terrain. You want the fence line to look very straight where the terrain allows and with very gradual undulations in varying terrain.

8. Pour concrete up to 2-4” below ground level. Work concrete into the hole by shaking the post. Use post level to ensure the post is plumb and in line, not rotated out of square.
9. After the concrete is set, fill the rest of the hole with dirt.
10. If impenetrable rock is encountered requiring a shallower hold, the posts can be trimmed from the bottom. Dig the hole around the rock to lock your concrete to the rock when it sets. This will allow the post to be set as rigidly as possible given the conditions.
11. Set all remaining posts the same way, utilizing a 110 ⅝” length piece of cut wood post as a spacing gage. Contact both posts at their base with the wood spacing gage. Butt each post tightly to the wood nose while setting the next post. Use a level to ensure the post is plumb and square. Eyeball your line before tapping it down. The plumb and square posts with the wood gauge on the ground will ensure optimum rail engagement throughout the fence line, including straight, rounded, or sloped fence lines.
12. When encountering an obstacle such as a corner, building, or gate, the post spacing distance will likely be shorter. Set the post where it needs to be to accommodate the obstacle. Plan to trim the rails later to fit as detailed below.

2 INSERTING THE RAILS

1. Once the concrete is set, the rails can be mounted. The concrete should be allowed to set at least 24 hours before you begin mounting the rails.
2. Make sure a rubber grommet is properly installed in each rail opening on the posts before you get started. Replace any missing rubber grommets using the extra grommets provided. Dampen the rubber grommets with a wet cloth to ease insertion of the rail.
3. Starting at a gate or terminal post (post #1), insert one end of the rail into the top rail opening. Swing it into position, then insert the other end of the rail into the top rail opening on post #2. Push the rail until it bumps the back side of post #2.
4. Take a lock spacer and drop it into the top of post #1. Pull the rail tightly back into the lock spacer. Let the top tab of the lock spacer rest on the top of the inserted rail. This will ensure the lock spacer is in proper placement to secure the other rails in the section. Insert the remaining rails using the same method.

5. Move to the next section of posts. Insert one end of the rail into the top rail opening of post #2. Swing it into position, then insert the other end of the rail into the top rail opening on post #3. Push the rail until it bumps the back side of post #3. Then, drop the lock spacer into post #2 and let the top tab of the lock spacer rest on the top of the inserted rails from the first section and the current section. Pull the rail until it bumps tightly into the lock spacer in post #2. Insert all the rails for this section using the same method.
6. Mount the remaining rails in each fence section following the same steps. Continue inserting the rails all the way down the fence line until the next terminal or corner post.
7. When encountering a corner or end post (or any shortened section), it may be necessary to cut the required rails to a shorter length. If so, measure the distance between the two posts, then add 3.5” and cut to that length. We recommend applying a cold galvanizing spray and touch up paint to the cut ends to resist future corrosion and rust. Insert the cut rails following the same procedure outlined above.
8. When entering a corner with the narrow (3.5”) post side facing the last post, it will be necessary to pull the lock spacers out of the corner post and the previous post in the fence line. Removing the lock spacers will make room to maneuver the rails inside of the corner post for the next section. Be sure to replace the lock spacers when the section is complete.

3 MOUNTING THE POST CAPS

1. Place the post cap on top of the post. Place a towel over the post cap. Make sure it is resting squarely on top of the post. Gently pound down with a rubber mallet to secure the post cap and make sure it is resting squarely on top of the post.
2. Continue down the fence line placing post caps on each post.

We recommend waiting three days before letting the horse back into the fenced area. This ensures the concrete footings are beyond at least half of their rated strength, even with a fast setting concrete. The horse will likely test the fence and could cause unnecessary damage if concrete footings are not adequately set. Installed correctly, the Buckley Fence will last generations.

Good luck! If you have any questions regarding these instructions or need help during installation, feel free to call us at 720-644-6884.

GATE DIMENSIONS

STAND-ALONE GATE DIMENSIONS

Stand-Alone 4 Foot Gate Dimensions with EZ Latch

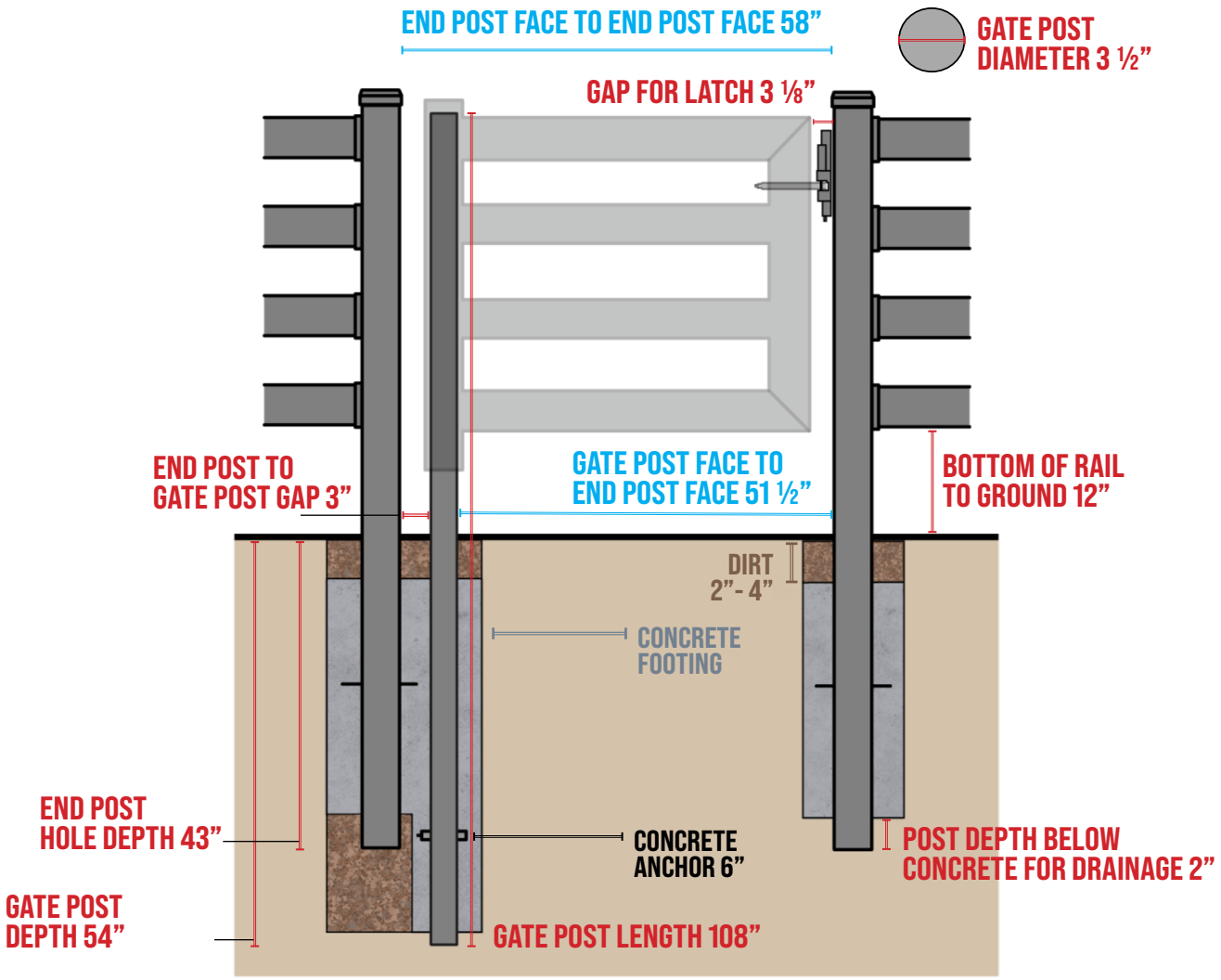

The installation dimensions for all stand alone Buckley Fence Gates are the same for all three sizes of gate, EXCEPT for the End Post Face to End Post Face measurement and the Gate Post Face to End Post Face measurement. These differentiating measurements are marked in the following figures in blue.

- End Post Face to End Post Face dimensions are exact and must be within the nearest ⅛”.
- End Post Face to Gate Post Face is exactly 3”. Reference page 16 for setting the spacing between End Post Face to Gate Post Face.

Stand-Alone Section Gate (~8.4ft) Dimensions with EZ Latch

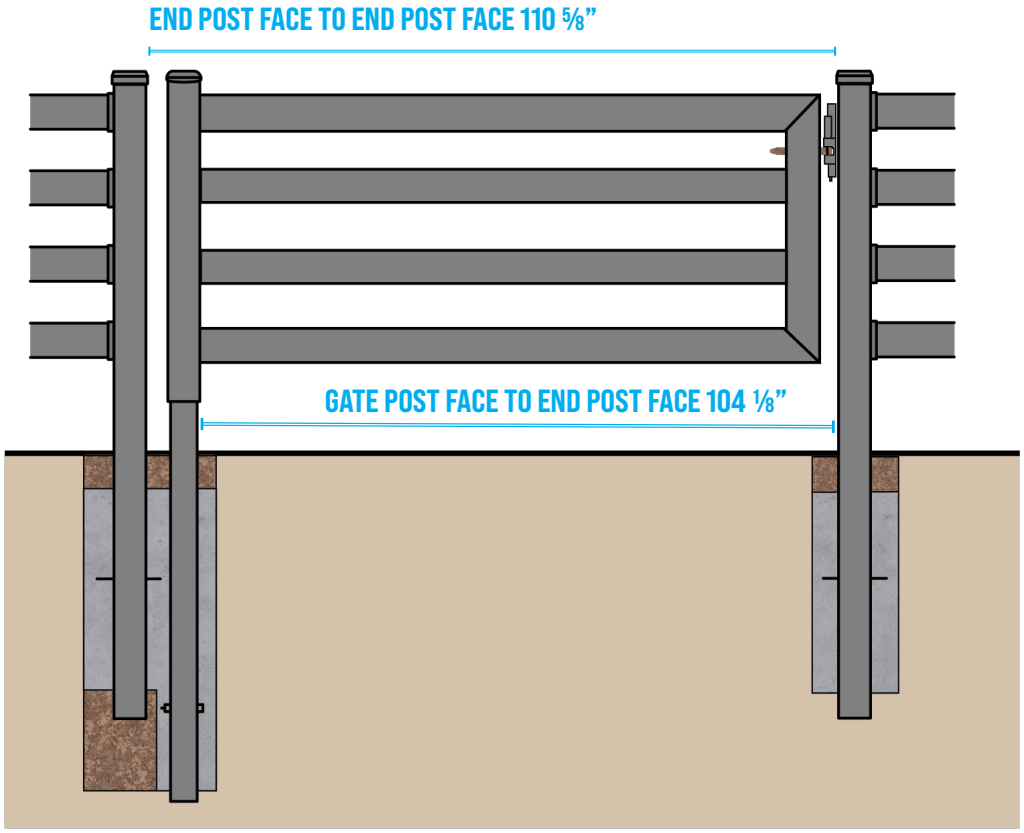

Stand-Alone 12 Foot Gate Dimensions with EZ Latch

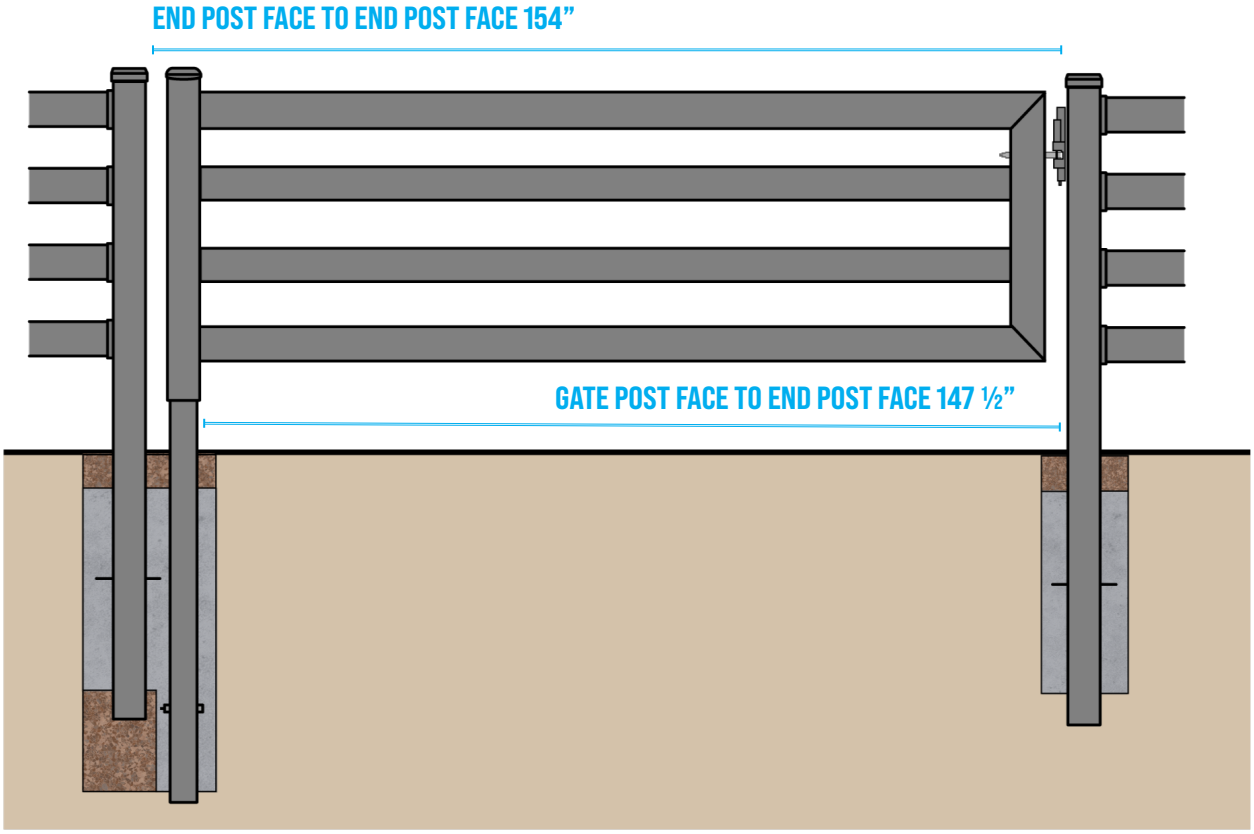

DUAL GATE DIMENSIONS

Dimension for any combination of Buckley Fence gates if used as doubles. Refer to the Stand-Alone Gate Dimensions on page 10 for individual gate dimensions.

For Dual Gates, you will measure from End Post to End Post and from Gate Post to Gate Post.

Dual 4 Foot Gates Dimensions

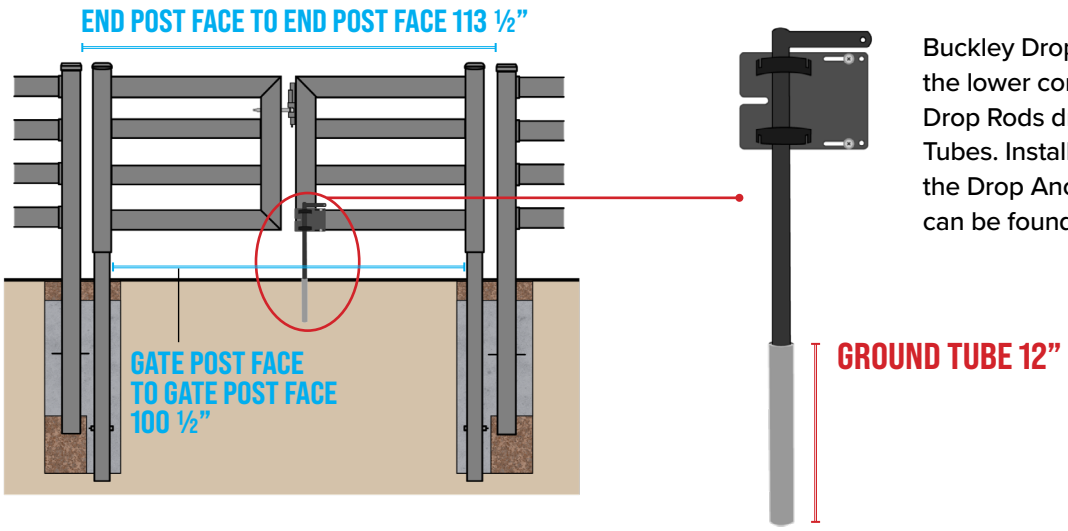

Buckley Drop Anchors clamp on the lower corner of your gate. The Drop Rods drop into 12” Ground Tubes. Installation instructions for the Drop Anchor and ground tubes can be found on page 26.

Dual Section Gates Dimensions

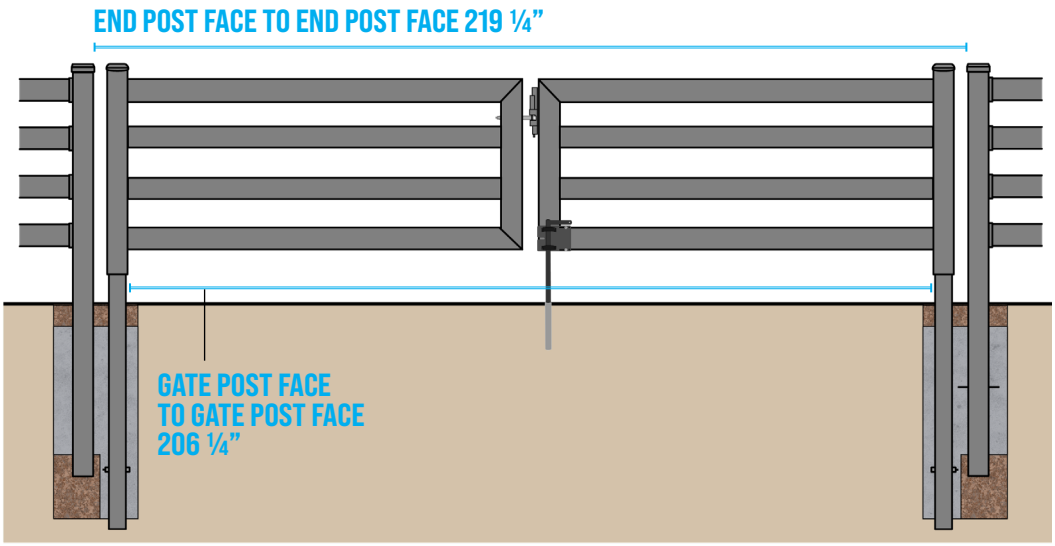

- The nominal opening between gate faces for Dual Gates is 4 ¼” when an EZ Latch is used. When not using an EZ Latch, the gap between gate faces is 3 ¼”. In this case, 1” should be removed from the End Post Face to End Post Face Spacing.

Dual 12 Foot Gates Dimensions

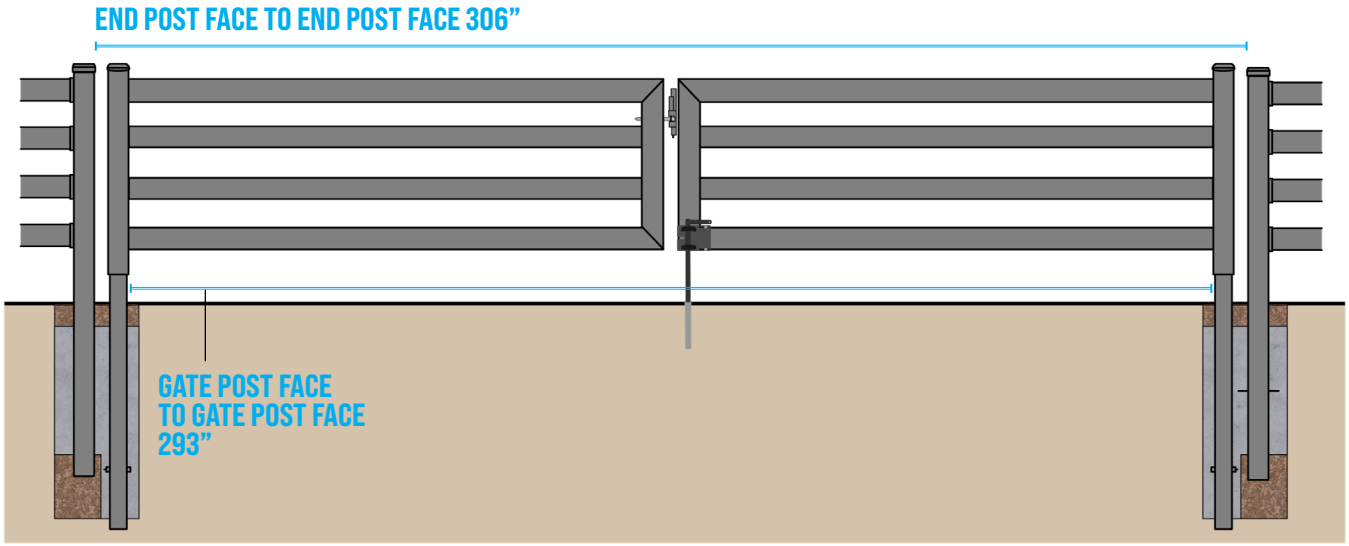

4 Foot + Section Gate Dimensions

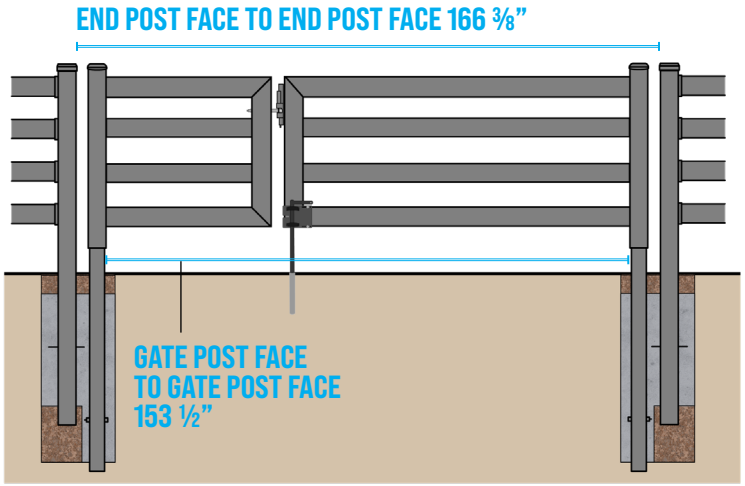

4 Foot + 12 Foot Gate Dimensions

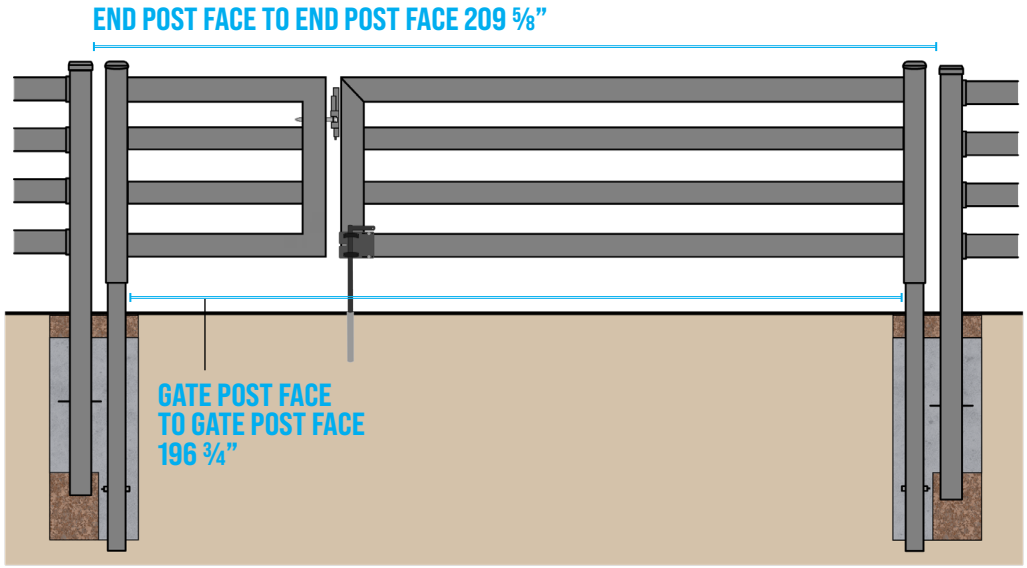

Section + 12 Foot Gate Dimensions

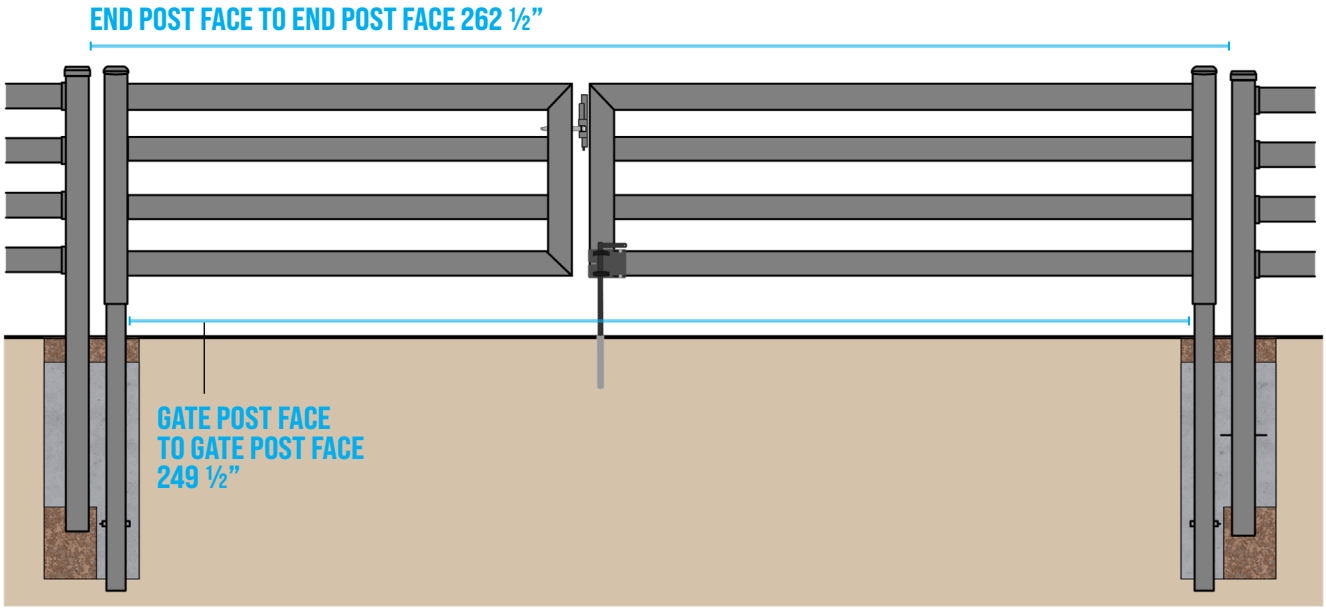

***Gate Post Face to Gate Post Face Dimensions are reference only and rounded to the nearest ¼”. End Post Face to End Post Face Dimensions are exact and must be within the nearest ⅛”.

GATE INSTALLATION

BUCKLEY STEEL BOARD GATE INSTALLATION WRITTEN INSTRUCTIONS

These instructions are for installing Buckley Gates on a new fence installation.

REQUIRED MATERIALS

1. Auger with extension
2. Tape measure
3. Stretch wrap
4. Level
5. Crescent wrench
6. Sledge hammer
7. 5/16” hex key or bolt
8. Three 80 lb bags of quick setting concrete
9. Two 4’ length 2x4’s (optional)

PARTS PROVIDED

1. 3 ½” diameter gate post
2. Gate (includes bearing assemblies)
3. Gate cap
4. 6” bolt
5. ⅜” nut

1 PREPPING THE POSTS

1. Near the bottom of the fence post, bend out the tabs with a screwdriver, set of pliers, or channel lock tool to at least 45° and not more than 90° (Figure 1). These anchor the fence post in the concrete.
2. Slide the 6” bolt through the hole to anchor the bottom of the heavy round gate post. Put on the 3/8” nut for retention (Figure 2).

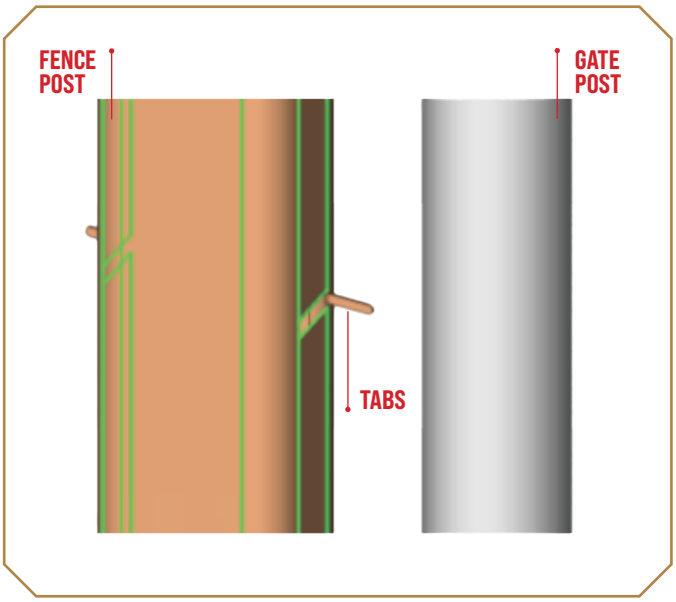

Figure 1

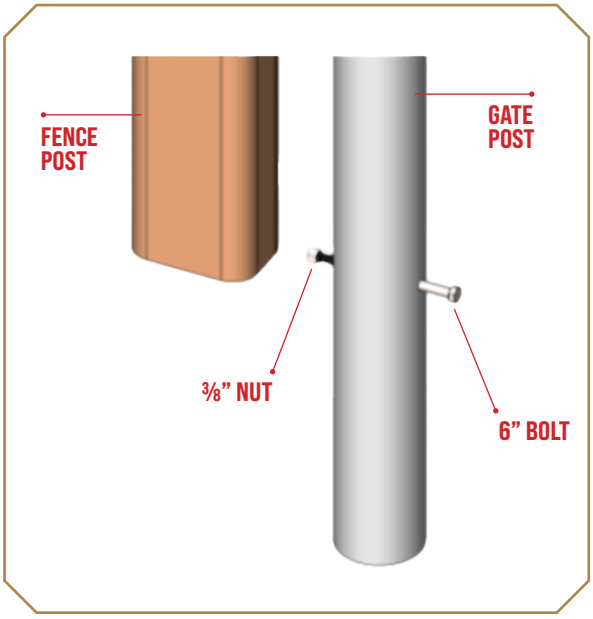

Figure 2

2 MOUNTING A FENCE POST & GATE POST IN THE SAME HOLE

1. If mounting both the gate post and a fence post, bore a hole 52” deep with a 12” diameter auger. Hand digging will be required if auger does not reach this depth or if close to an obstacle or electrical line.
2. Set the gate post assembly in the hole with a 3” gap to the existing end post. Plumb and square the gate post using two 2x4s which will equal 3 inches total in width (Figure 3). Use stretch wrap around the gate post, fence post, and 2x4s to temporarily hold them together .
3. Use a sledge hammer to tap the fence post and gate post into the ground (use a wood block for cushioning the blow). Tapping the post down the last inch or two enables drainage to the soil once the concrete is set. Do this until you measure 54” from ground level to top of the fence and gate post.
4. Ensure the gate post is square and the height is correct. Pour the quick-setting concrete into the hole to a height of 2”to 3” below ground level. Work concrete into the hole by shaking the post. After the concrete is poured, check again that the gate post is plumb and the height is correct in case of movement.
5. After the concrete is set, fill the rest of the hole with dirt.

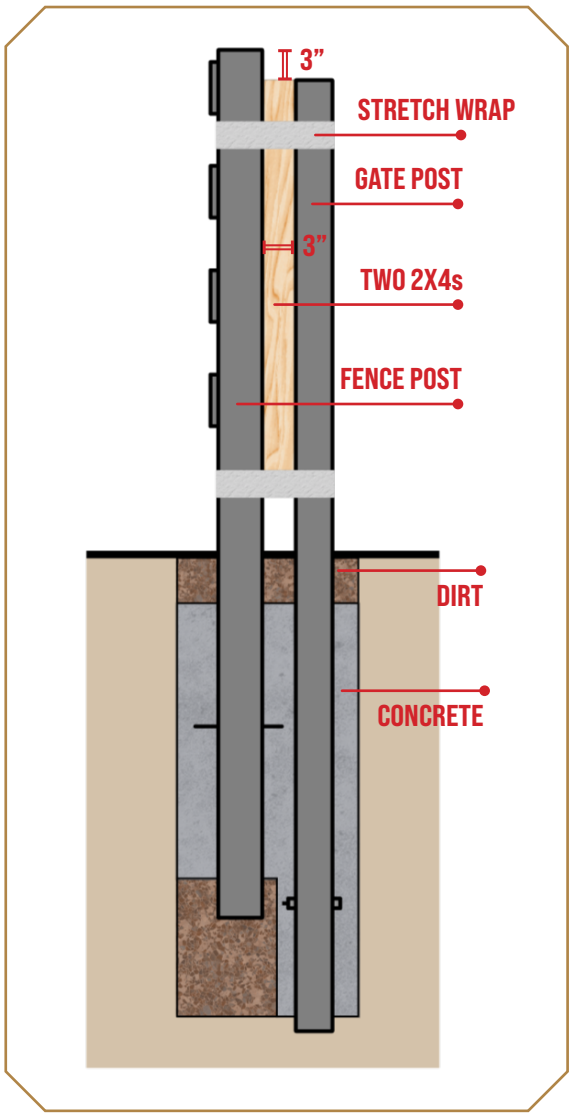

Figure 3

3 MOUNTING A GATE POST NEXT TO AN EXISTING FENCE POST OR A WALL

1. When installing a gate post next to a wall or existing fence post, dig a 52” hole adjacent to the fence post with a 10” diameter. Hand digging will be required if auger does not reach this depth.
2. With the cross bolt and nut installed into the gate post, set the gate post in the hole with a 3” gap to the existing fence post. Plumb and square the gate post with the fence post.
3. Use a dead blow hammer to tap the gate post into the ground. Tapping the post down the last inch or two enables drainage to the soil once the concrete is set. Do this until the top of the gate post matches the height of the top of the top rail. This will measure 54” from ground level to the top of the gate post. The top rail of the gate should be at the same height as the gate post top and should match the top fence rail height.
4. Ensure the gate post is square and the height is correct. Pour the quick-setting concrete into the hole to a height of 2” to 3” below ground level. Work concrete into the hole by shaking the post. After the concrete is poured, check again that the gate post is plumb and the height is correct in case of movement.

4 ASSEMBLING AND LEVELING THE GATE

1. Once the concrete is fully set, ideally two days after pouring, remove the stretch wrap and 2x4’s from between the two posts. Take the gate and lift it over the gate post. (Figure 4) When the gate is placed on its gate post, the top will be seated firmly in the upper bearing inside the gate.
2. The two holes used to rotate the lower bearing are directly below the screw holes in the bearing. Line the bearing screw holes with the holes in the gate hub bottom and replace the screws. Torque until tight. Also, look down the fence line and judge the final position of the gate relative to the fence top rail. They should be in line.
3. You may have to jiggle the gate to be sure the bearing catches the post top. The top rail of the gate should be at the same height as the gate post top and should match the fence rail height (typically 54”). Once seated, there should be very little play in the gate when lifting the end.
4. Place a level on the top rail of the gate. Check level. If the gate is not level, have a helper lift the weight off the end of the gate to allow easy rotation of the lower bearing (Figure 7)
5. Remove the two lower bearing retainer screws (Figure 5). Rotate the bearing using a 5/16” hex key in the holes provided to level the gate. Once the top rail is level, line up the nearest bearing screw hole by rotating the bearing and replacing the screw (Figure 6).
6. Screw the gate post cap on either clockwise or counterclockwise. This cap lock relies on a quarter turn of the cap to seat. The gate post cap will simply click into place. To remove the cap, rotate a quarter turn in either direction
7. When the gate is level, opening and closing easily and quietly, you have finished assembly.

Figure 5

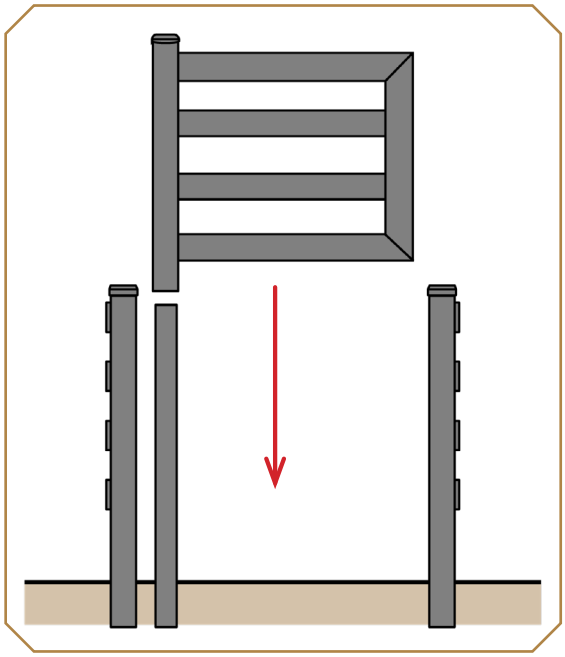

Figure 4

Figure 6

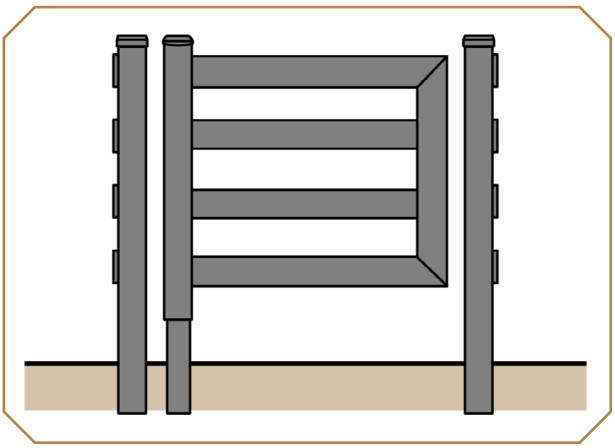

Figure 8

Figure 7

EZ LATCH INSTALLATION

EZ LATCH INSTALLATION ONTO BUCKLEY FENCE

Leveling and aligning the gate must be done before mounting the EZ latch. Please refer to page 17 for instructions on leveling the gate.

REQUIRED MATERIALS

1. ⅜” chuck drill motor
2. ½” Drill Bit *
3. Adjustable wrench
4. 5⁄16” Hex key wrench
5. Marking pen

PARTS PROVIDED (Figure 1)

a. EZ Latch Kit which includes:
b. Flanged support tube
c. ⅜” latch pin
d. Mounting plate
e. Two ⅜” bolts
f. Washers

*A step drill is preferred that starts small and steps up to ½”. If not available, we suggest multiple drills.

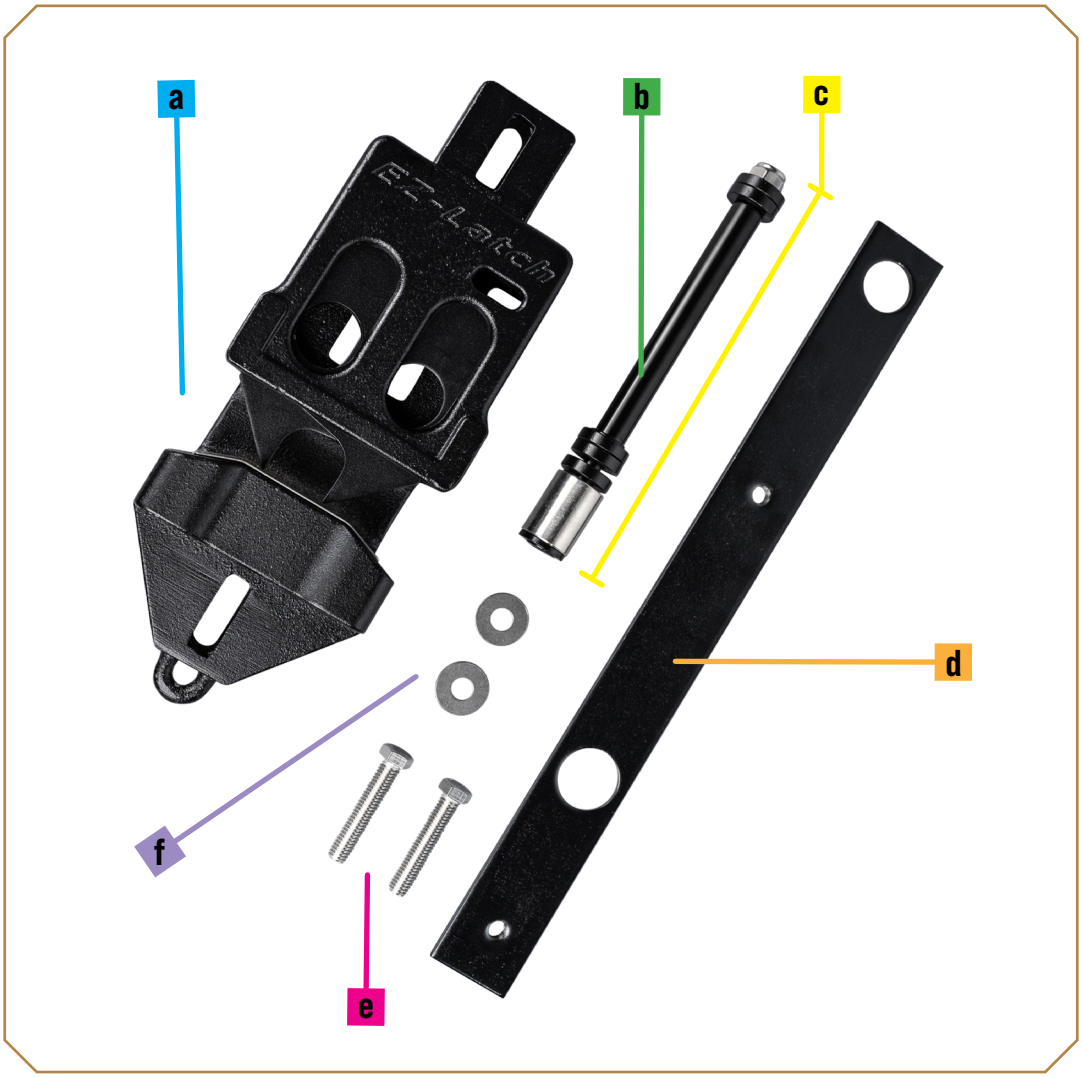

Figure 1

1 SETTING THE LATCH PIN

1. Place enough washers on the latch pin (Figure 1) to allow the end of the pin to clear the latch post by 1/2” or slightly more. Insert the ⅜” pin into the pre-drilled gate hole from the outside.
2. Slide the flanged support tube onto the pin from the inside of the gate around the latch pin (Figure 2).
3. Check the pin gap to the latch post. Adjust the washers to gap out between ½” and ¾”.
4. Place the remaining washers and nut onto the pin (Figure 3).
5. Tighten the latch pin nut to 20 ft lbs of torque by using a 5/16” hex key in the end of the pin to hold it from rotation while tightening the nut.

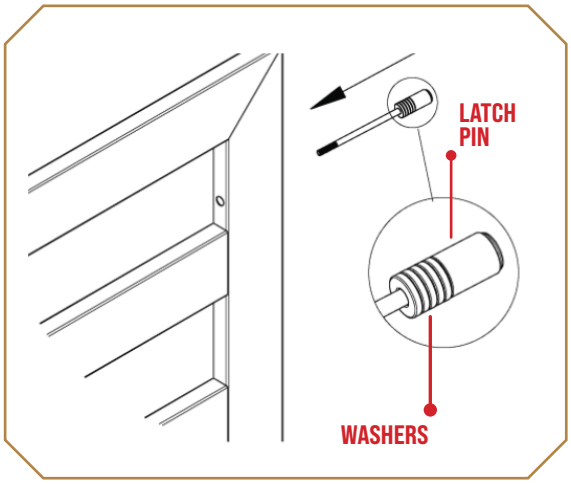

Figure 1

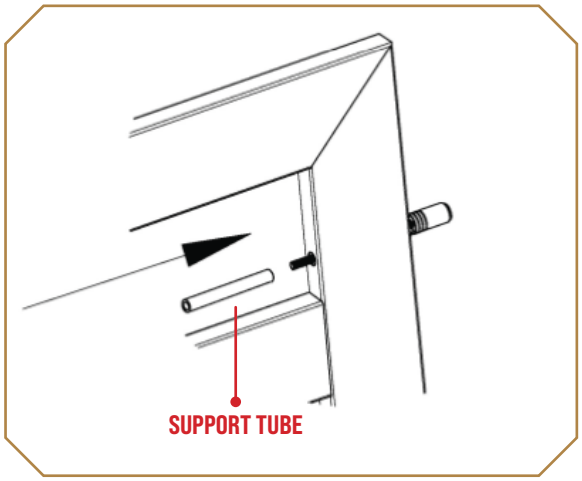

Figure 2

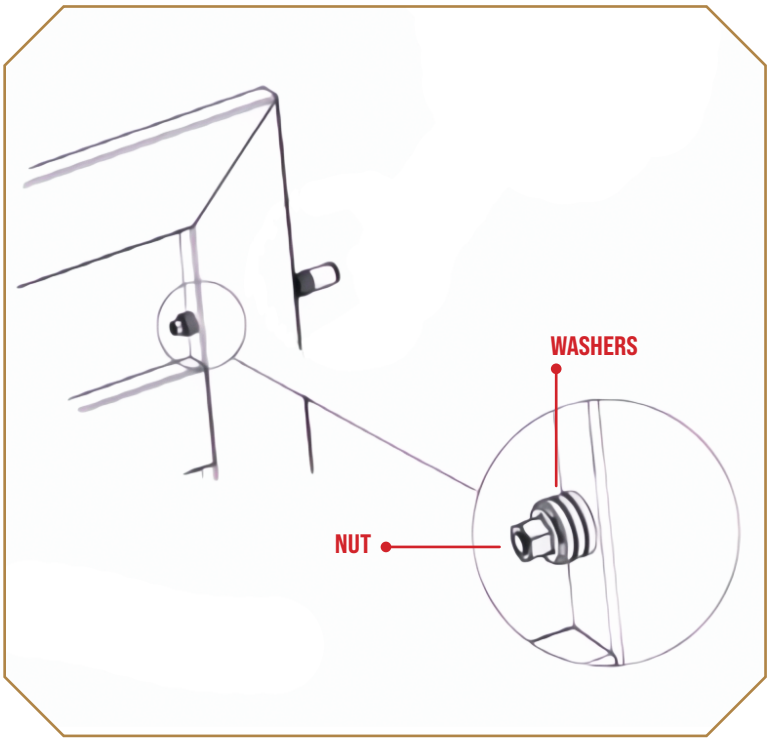

Figure 3

2 MOUNTING THE LATCH

1. Using the mounting plate, mark two hole centers shown on Figure 4. Assure they are centered on the inside of the latch post.
2. Drill two ½” diameter holes at the marked spots (preferably with a step drill).
3. Position the mounting plate on the inside of the post. As a safety measure, you may tie a string through the hole to allow retrieval of the plate should you accidentally drop it. Mount the top screw and washer through the latch by putting the screw through the drilled holes and then through the mounting plate (Figure 5).
4. Finger tighten the latch to the post using the two screws and washers. With the screws snuggled into position, swing the gate into the latch.
5. Push the latch upward to contact the latch pin and torque the mount screws to 20 ft lbs (Figure 6).
6. The bolt slots allow for ½” adjustment up and down. Adjust as required. Your latch is now secured.
7. Test your latch both ways. Be sure the pin slightly raises the gate when closing.

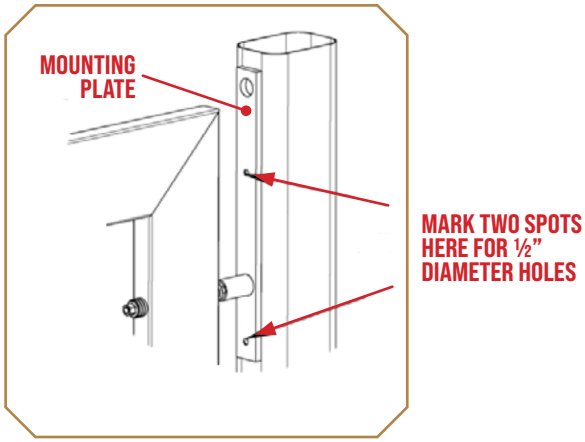

Figure 4

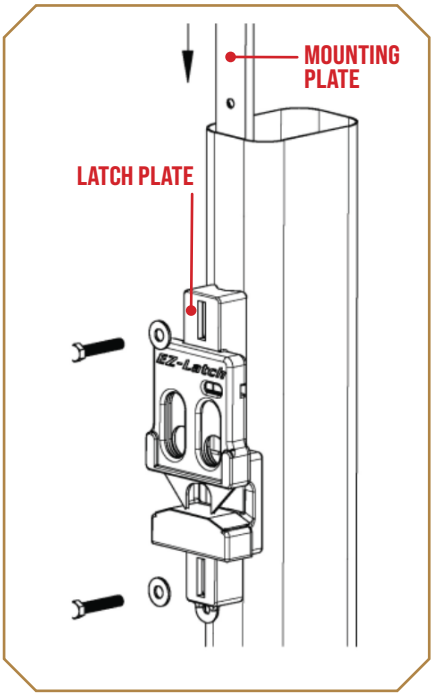

Figure 5

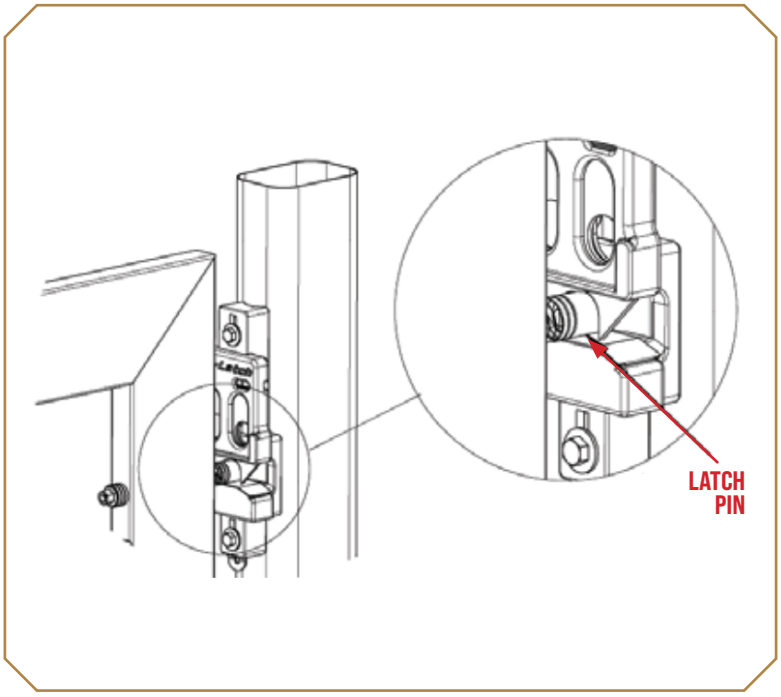

Figure 6

EZ LATCH ONTO WOOD

EZ LATCH INSTALLATION ON TO WOOD

The EZ Latch works with almost any gate including wood, vinyl, or pipe. The following instruction are for EZ Latch installation on a wooden post. Installation is similar with a few notable differences.

REQUIRED MATERIALS

1. ⅜” chuck drill motor OR 5⁄16” Hex key wrench (read below)
2. Drill bit (size depending on method used)
3. Marking pen

1 INSTALLATION PROCEDURE

1. Position the latch pin on the gate at the desired height.
2. Position the EZ Latch to make contact with the pin on the rest plate.
3. Make two dots with a marker at the center of the slots on the EZ Latch for bolts (See Figure below).
4. Drill clearance holes for two 3/8” through-bolts (or a 5/16” hole if using lag screws when screwing directly to the post). Stainless steel lag screws and washers are provided. Due to the various sizes of posts, the through-bolts are not included in the kit and are an optional mounting method.

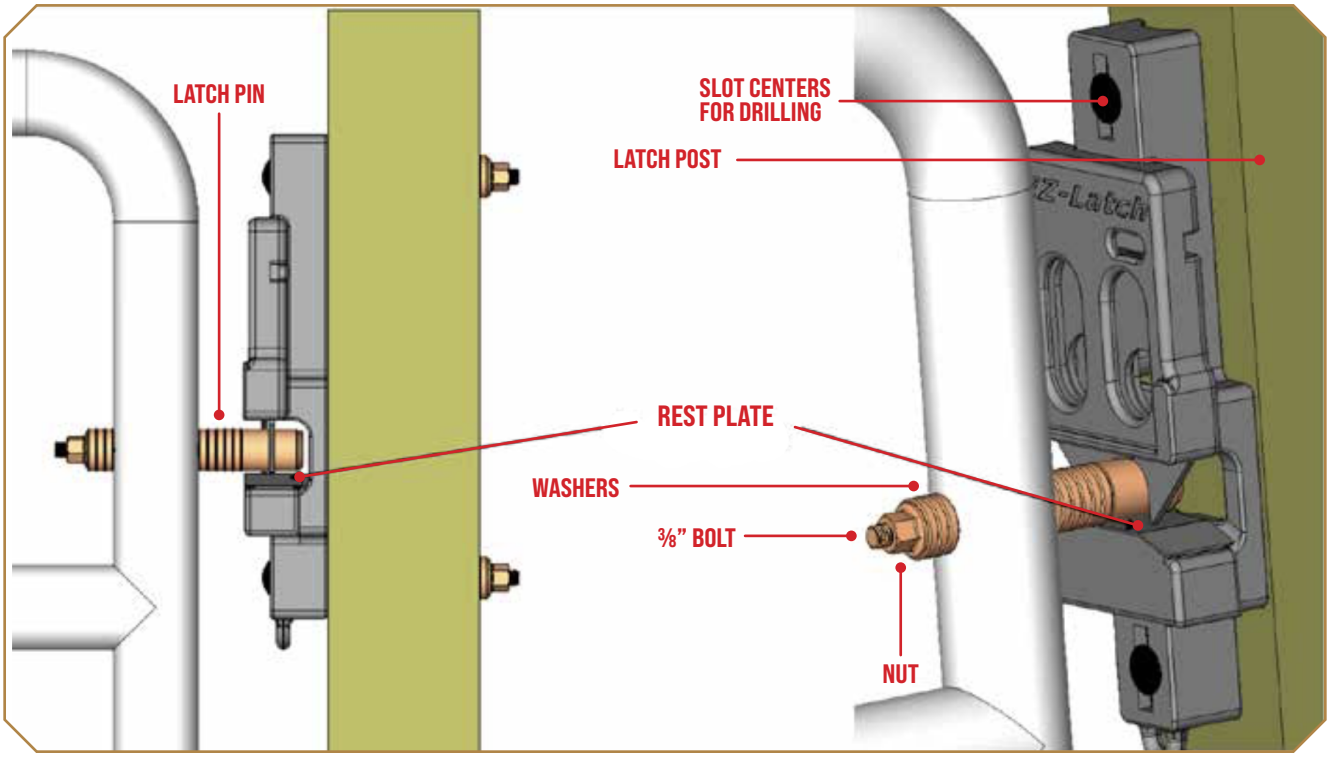

SWINGING GATE LATCH

SWINGING GATE LATCH INSTALLATION INSTRUCTIONS

This popular setup is used instead of using dual drop anchors. This setup allows one of the two gates to be used as an every day gate with common latch setup. Lift the ground anchor to open the second gate. Both of the gate's lower bearings can be rotated for gate level (and fine adjustment of the latch and latch pin vertical positions). Complete the gate leveling before proceeding to mount the EZ Latch. The EZ Latch kit comes with a mounting plate which will not be used for the swinging gate latch setup. Reference the adjustable lower bearing instructions on page 17. Reference Drop Anchor installation on page 26.

PLACEMENT GUIDE (Figure 1)

One complete EZ Latch Kit (reference page 19)

a. Two Flanged latch pin tubes
b. Two ⅜" 16 Socket Head screws 8" long
c. Two ⅜" 16 lock nuts
d. Six ¼" thick washers 1" diameter
e. Two standard ⅜" x 1" outside diameter stainless steel washer

One complete Drop Anchor kit (pre-assembled)

f. Drop Anchor housing
g. Drop tube with handle
h. 12" ground tube
i. Four ¾" bolts

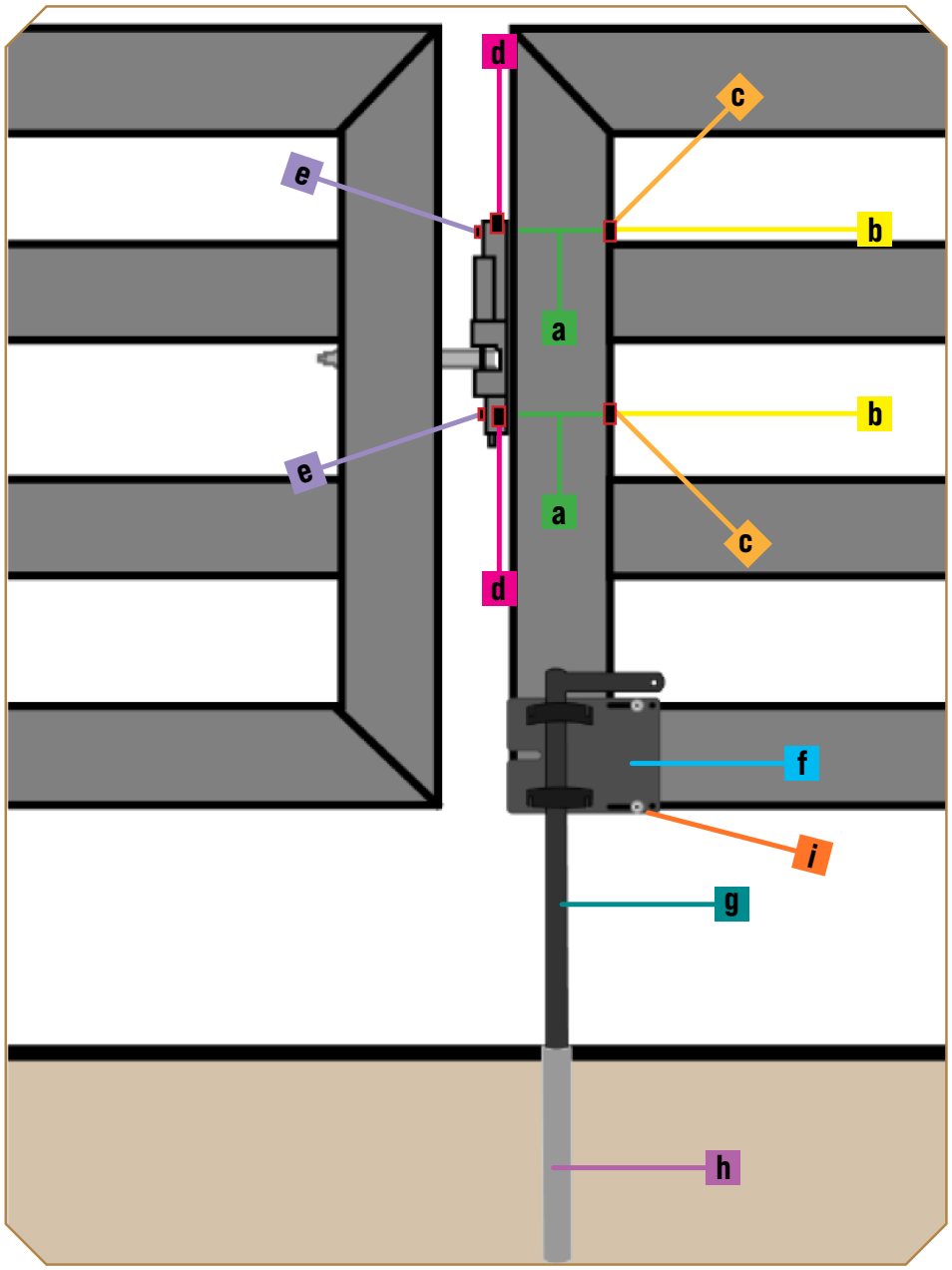

Figure 1

1 INSTALLATION PROCEDURE

1. Mount the EZ Latch housing on the gate with the drop anchor. Mount the latch pin assembly on the other gate (reference page 19 for EZ Latch installation). Mount on the 2nd rail from the top (on both 3-rail and 4 rail gates). The bottom drill hole should be 3 ¾” from the bottom of the 2nd rail. The upper hole should be centered ¾” from the top of the 2nd rail.
2. Drill three 21⁄32” holes (1 hole on the pin-gate; 2 holes on the ground-anchor gate) using a step drill. Reference the pink circles on Figure 2 for placement.
3. Drill three 13⁄32” holes on the outside face of both gates (1 hole on the pin-gate; 2 holes on the ground-anchor gate) using a step drill. Reference the green circles on Figure 2 for placement.
4. Use matching touch-up paint and primer on all drilled holes.

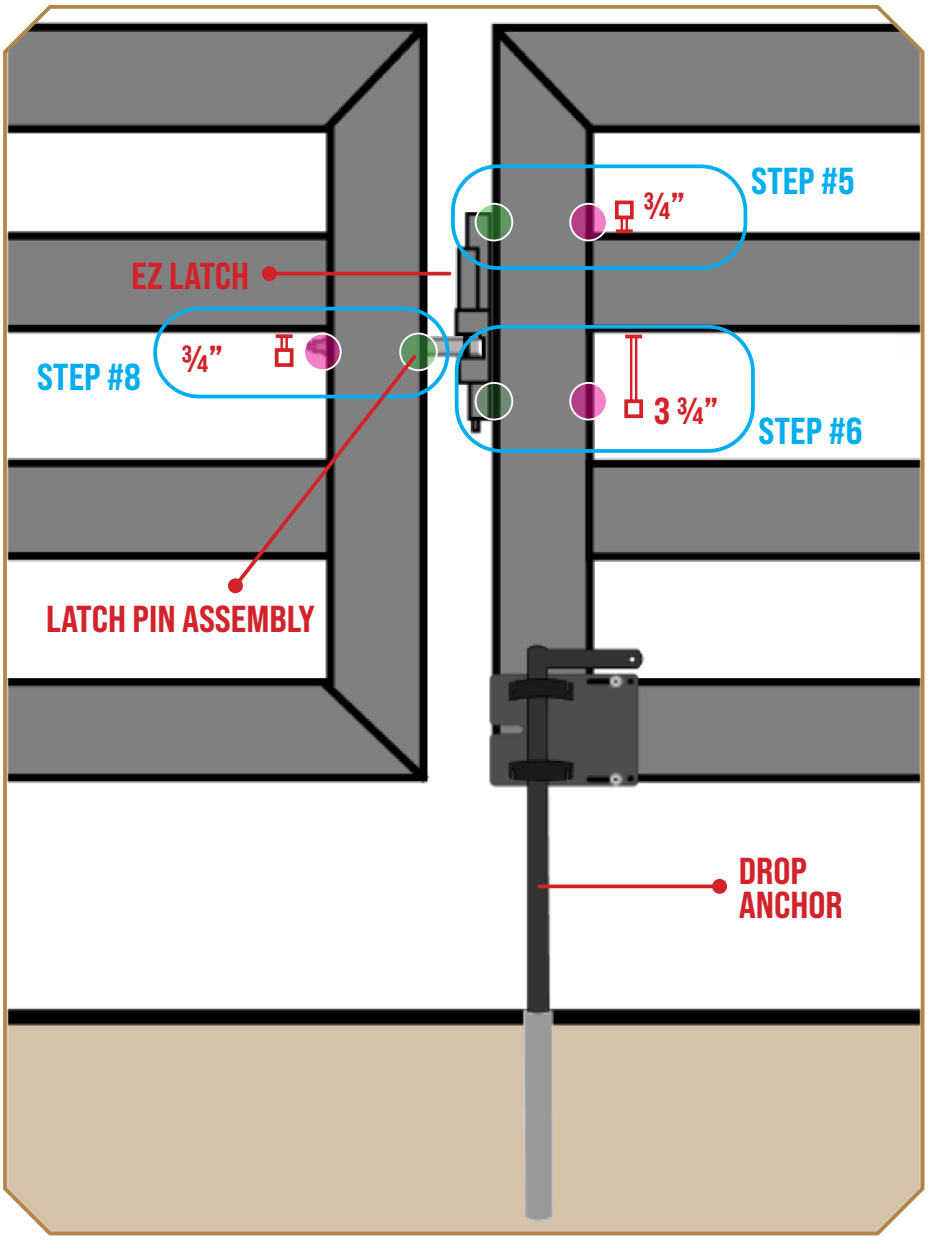

Figure 2

- 3 Drill Holes at 21⁄32”
- 3 Drill Holes at 13⁄32”

5. Insert the 8” bolt through the thin stainless steel washer and the top latch slot in the latch. Then, insert the bolt through the two ¼” heavy black washers. Then insert through the drilled holes in the gate with the ground anchor. Slide the black flanged tube over the screw and into the larger hole inside the gate. Slip on a ¼” heavy black washer and spin down the lock nut loosely.
6. Repeat this assembly method for the lower slot and screw.
7. Lightly tighten the nuts just to hold the latch bolts roughly centered in the latch mounting slots.
8. Assemble the latch pin assembly through the other gate’s newly drilled pin holes using the flanged sleeve. Place the ¼” heavy black-washers so the pin end clears the latch body by at least ⅛”.
9. Tighten the latch pin using the crescent wrench and the 5⁄16” hex key to 30 foot-pounds of torque.
10. Drop the drop anchor into the ground tube to secure the gate into it’s closed position.
11. Swing the latch pin gate into contact with the latch.
12. Tap the latch upward until the stainless steel latch rest plate contacts the latch pin.
13. Tighten the latch mounting screws to 30 foot-pounds torque while maintaining this pin contact position.
14. Test the gate swing and latch. Adjust if necessary.

DUAL GATE ANCHOR

2 DROP ANCHORS FOR DUAL BUCKLEY FENCE GATES INSTALLATION

1. Clamp the drop anchor housings onto the gate ends using two of the three fastener sets (sets include 2 barrel nuts and four ¾” bolts). The nuts fit closely to the top and bottom surfaces of the bottom rail (Figure 2).
2. Force the inside surface of the mount housing tight to the gate face. Torque the screws until tight. Assure the housing is square to the gate.
3. Swing the two gates into the optimal closed position. Look down the gates to assure they are in line.
4. Drop the drop tube with handle to the ground. Mark the exact spot for the ground tubes.
5. Install the ground tubes in the ground vertically, either by driving them down or digging a hole and concreting them in place. If concrete is used, tape the tube bottom during fill to keep the concrete out. Assure the drop pin can penetrate the ground tube to the earth bottom.
6. The drop tubes with handles are made extra long for various terrain issues. Cut the bottom of the drop handle tube off to suit your ground tube position (Figure 3).
7. Once the ground tubes are set, clear out the dirt from inside the tubes and drop the handles into the tube. If the lock handle does not drop fully in the housing slot, cut the drop tube bottom to allow it to fully engage the handle in the handle slot.
8. Lift the drop pins to the up and twist in order for the gates to swing.
9. Ensure all fasteners are tightened.

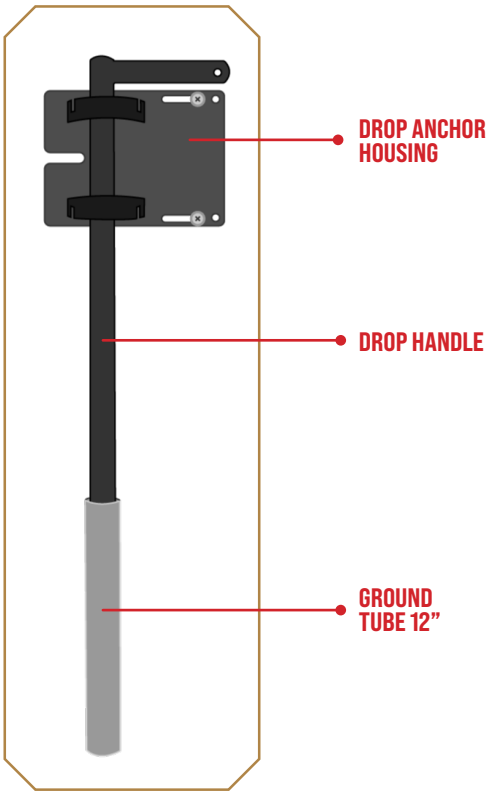

Figure 1

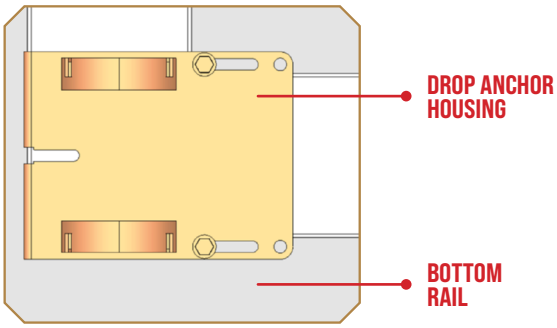

Figure 2

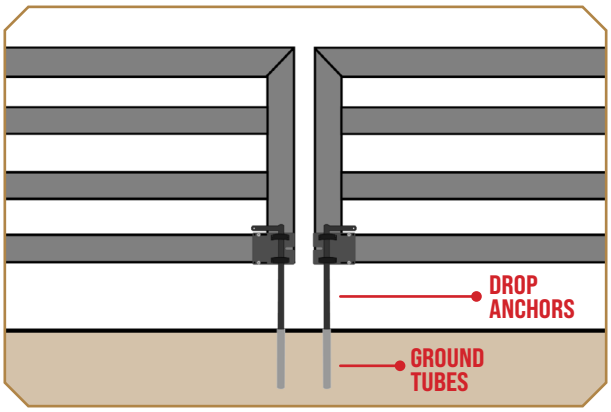

Figure 3

WIRE MESH CLIP PLACEMENT

WIRE MESH CLIP PLACEMENT DIAGRAMS

For the standard wire mesh system shown in red, the number of wire mesh clips needed per section is 11. We recommend purchasing slightly more clips than needed in case of error.

End & Line Post Wire Mesh Clips Front View

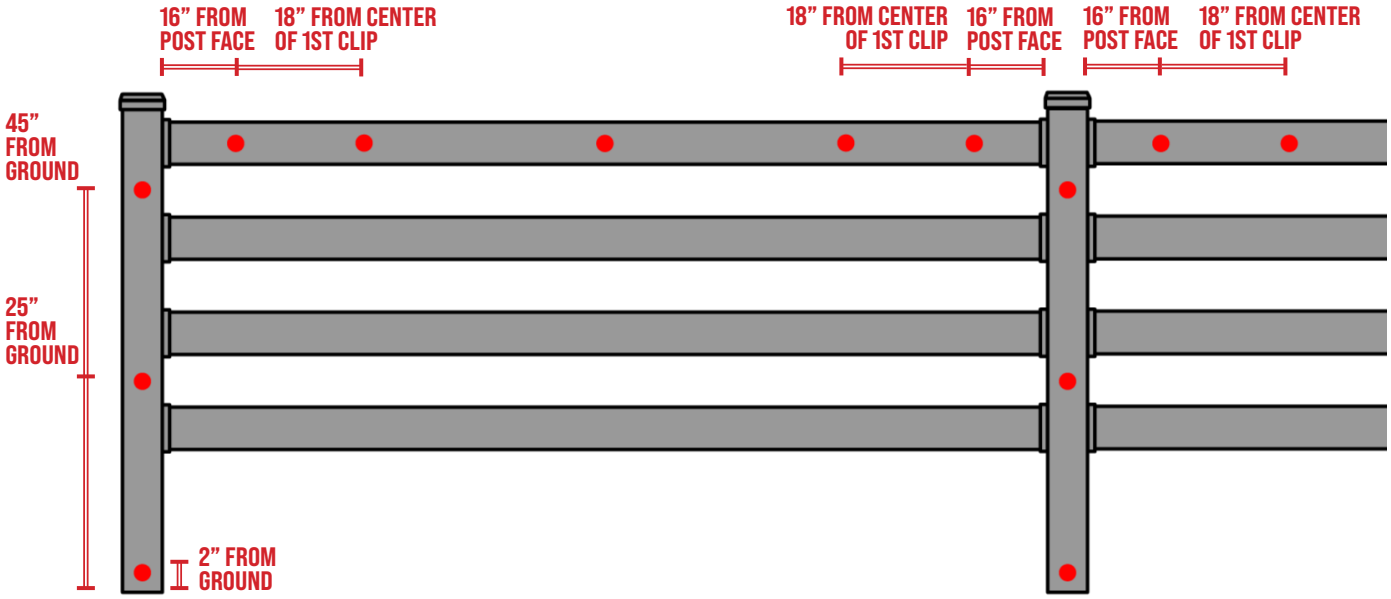

End & Line Post Wire Mesh Clips Top Down View

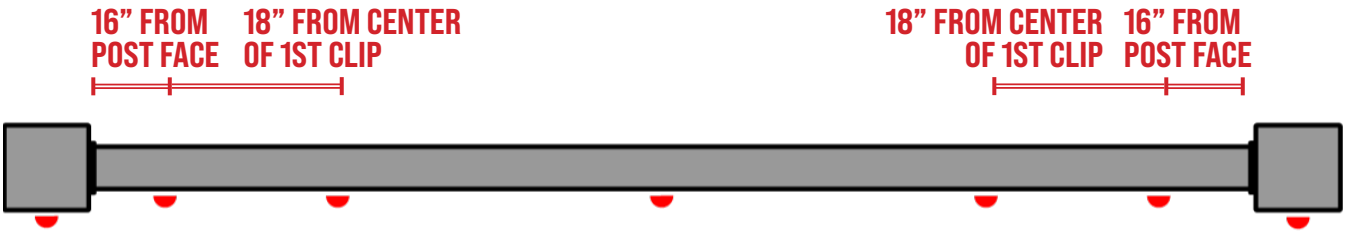

Corner Post Front View

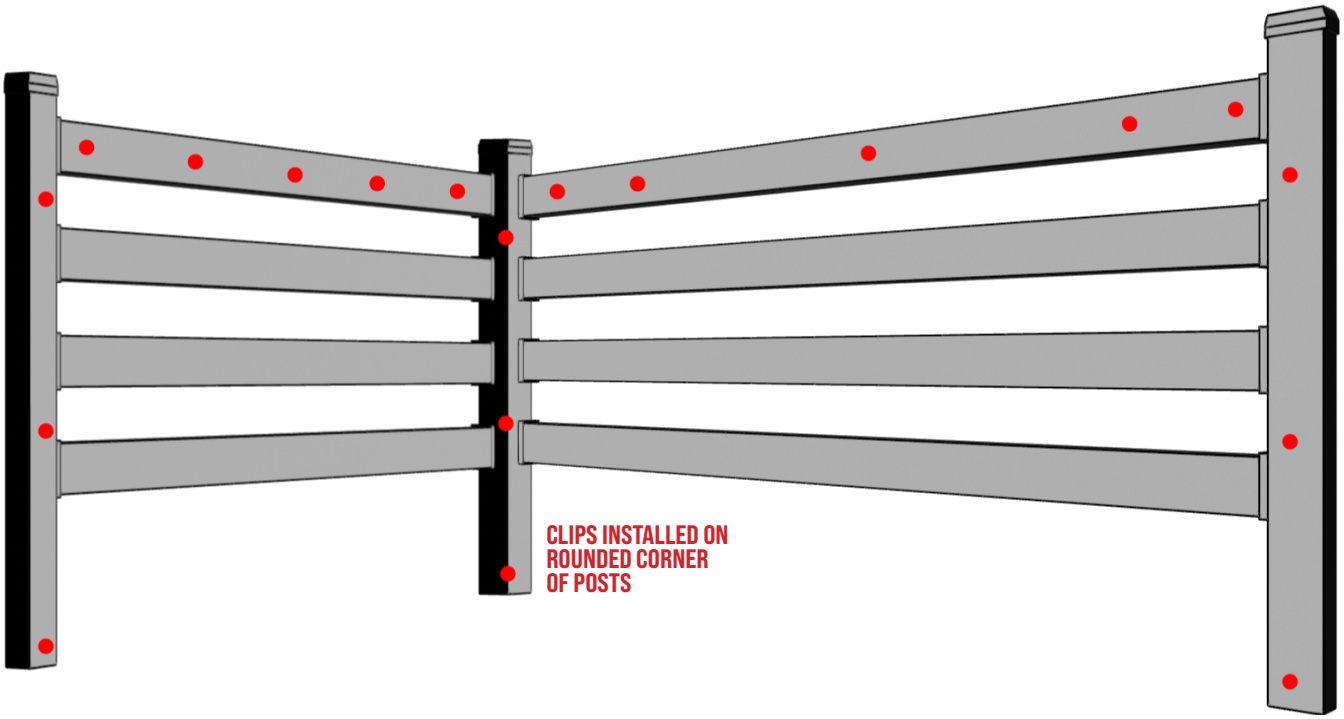

Corner Post Top Down View

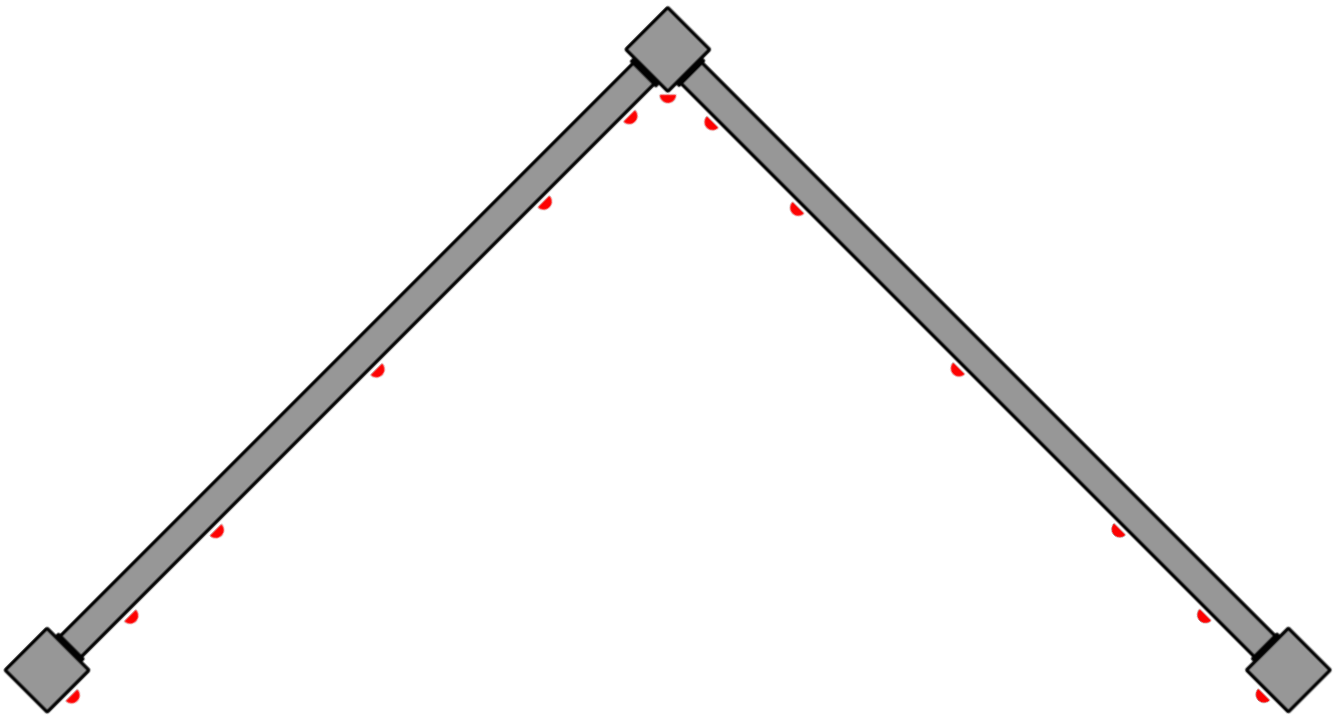

Tee Post Front View

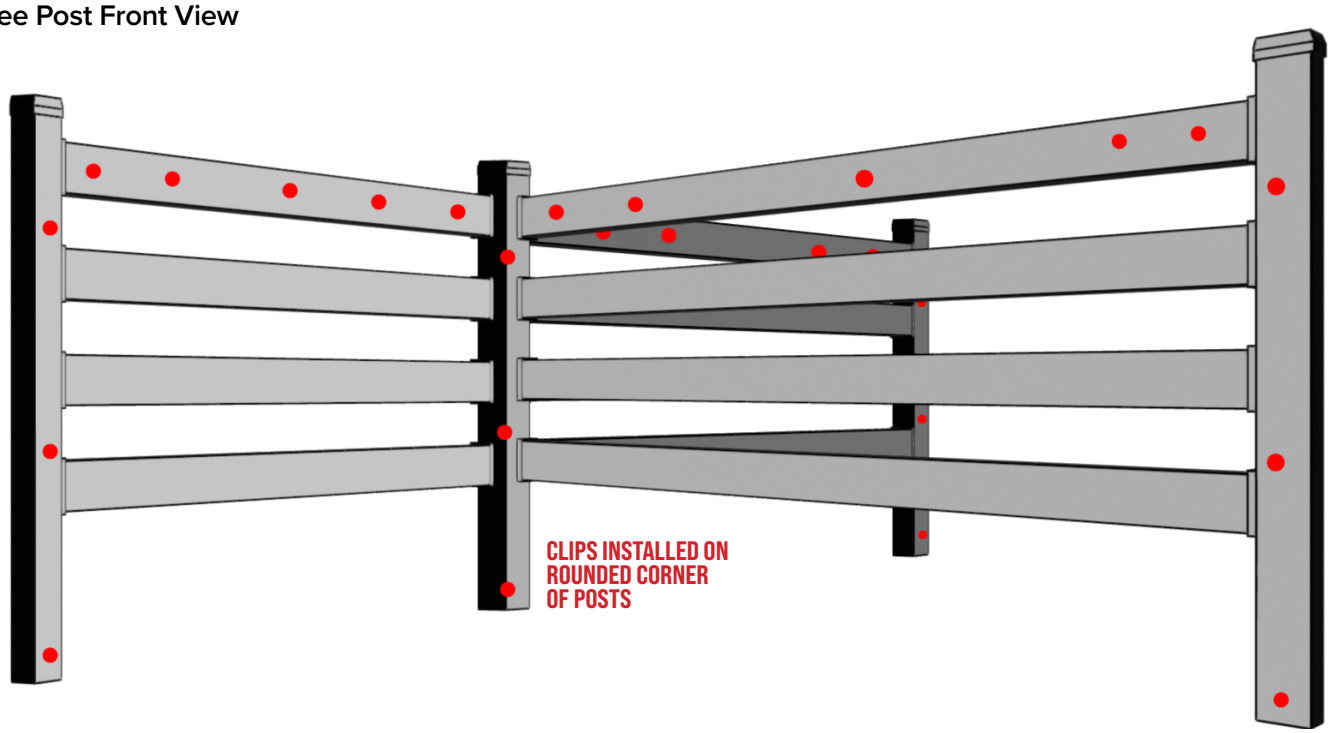

Tee Post Top Down View

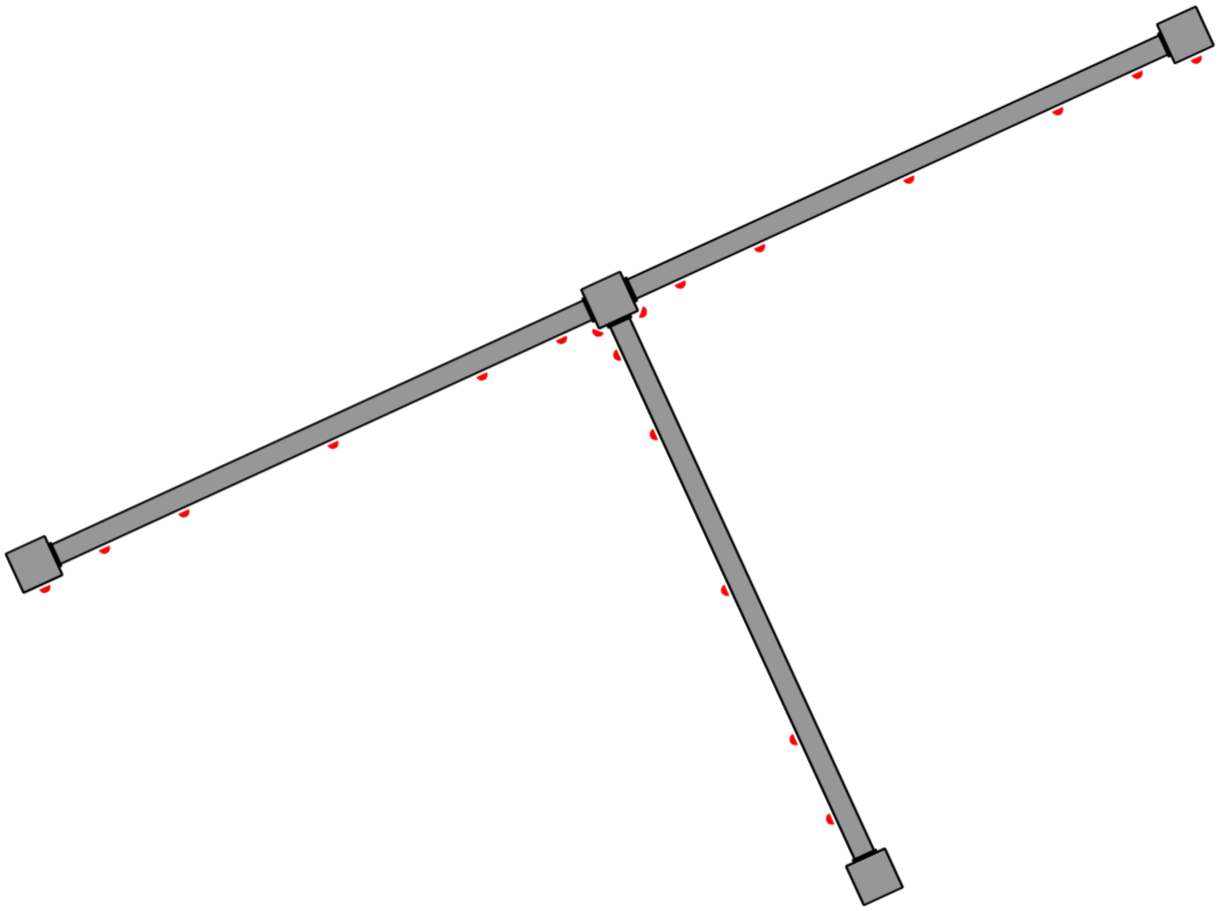

4-Way Post Front View

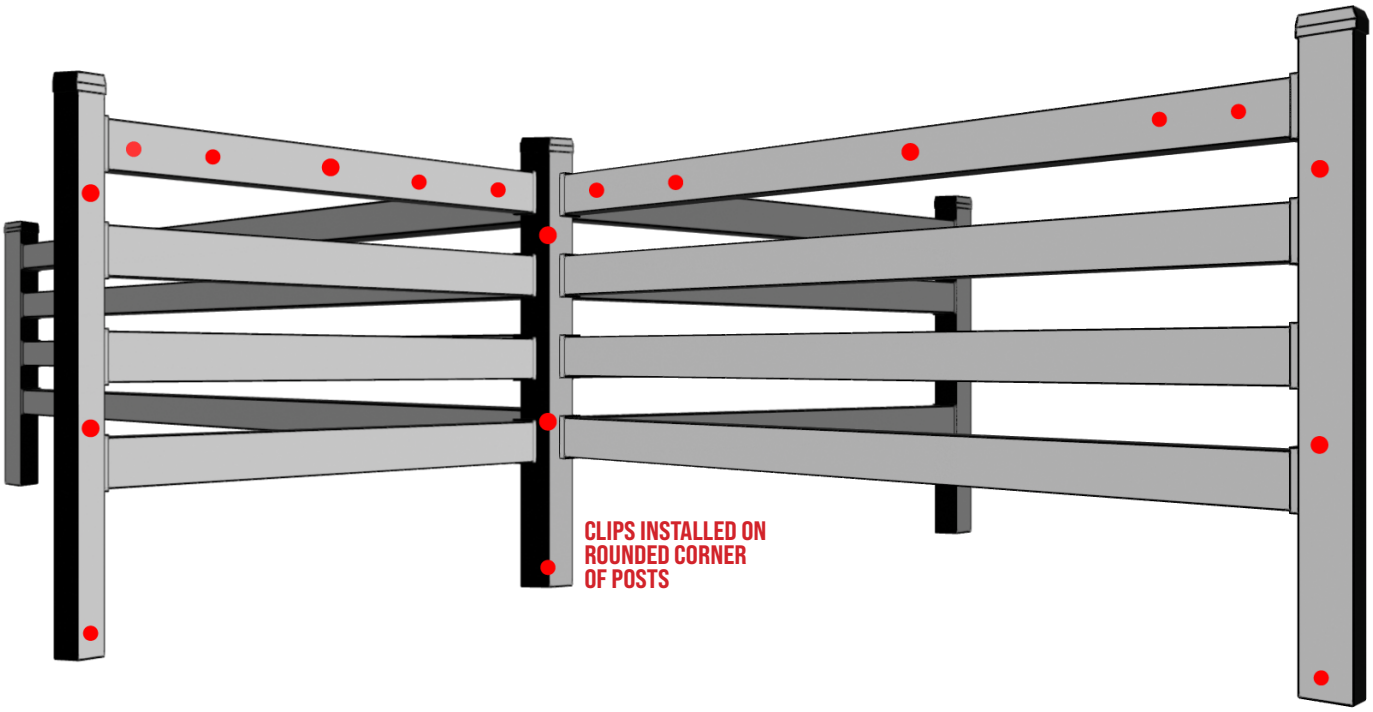

4-Way Post Top Down View

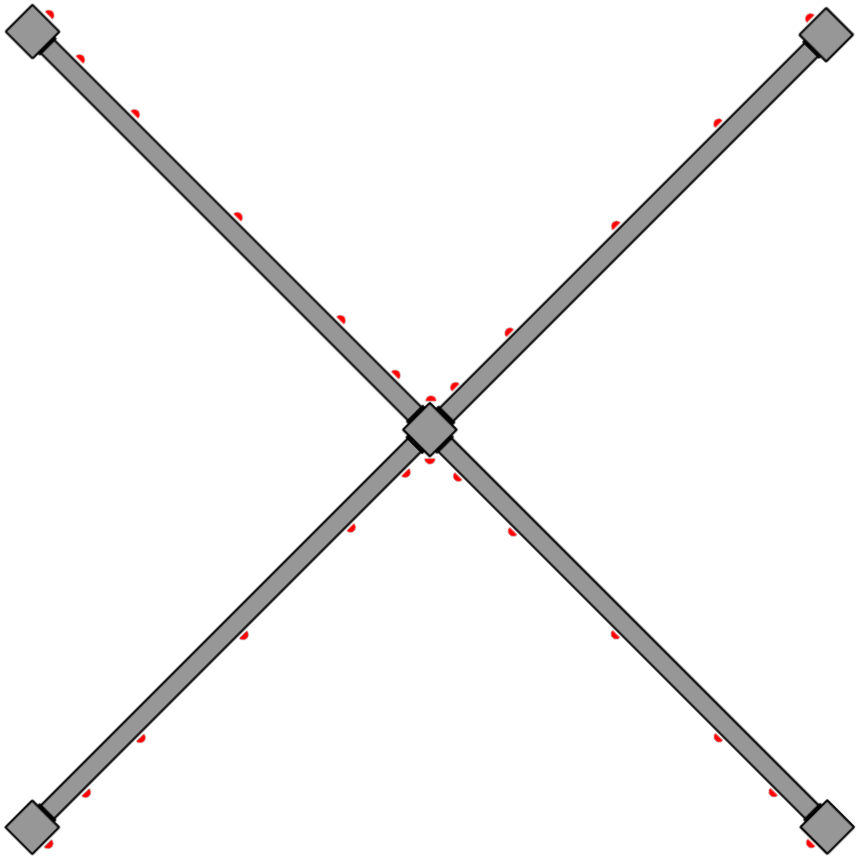

Wire mesh clips can be applied on either side of the enclosure if using tee or 4-way posts. Placement may depend on where animals are placed in the enclosure. It's possible to install wire mesh on both sides, but usually not necessary. Please ask your sales representative for specific recommendations for unique situations.

WIRE MESH CLIP PLACEMENT ON GATES

3 RAIL GATES

For 4 ft and Section gates, 9 wire mesh clips are needed. For 12 ft gates, 12 wire mesh clips are needed. Please reference diagrams below for wire mesh clip placement on 3 rail gates.

4 Foot & Section Gate (~8.4ft) Placement

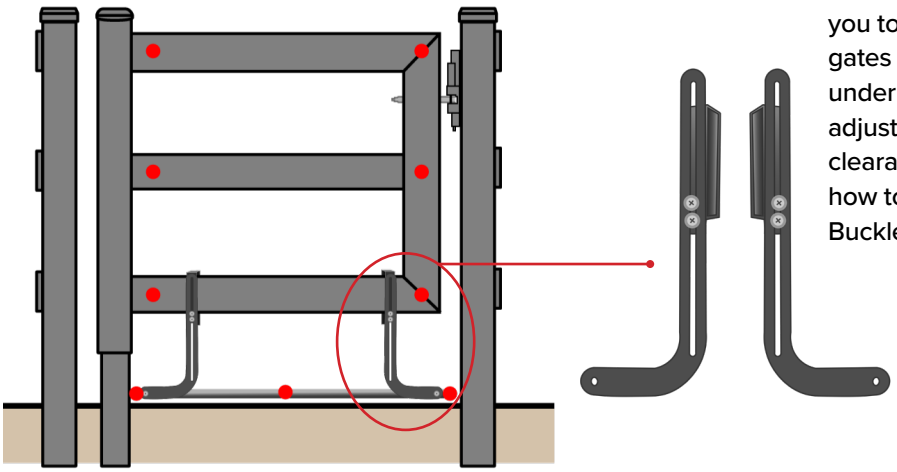

Our steel Boomerang Brackets allow you to extend any wire mesh beneath gates to keep animals from getting underneath. They are vertically adjustable to optimize ground clearance. Refer to page 34 on how to install Boomerang Brackets to Buckley Gates.

12 Foot Gate Placement

4 RAIL GATES

For 4 ft and Section gates, 11 wire mesh clips are needed. For 12 ft gates, 15 wire mesh clips are needed. Please reference diagrams below for wire mesh clip placement on 4 rail gates.

4 Foot & Section Gate Placement

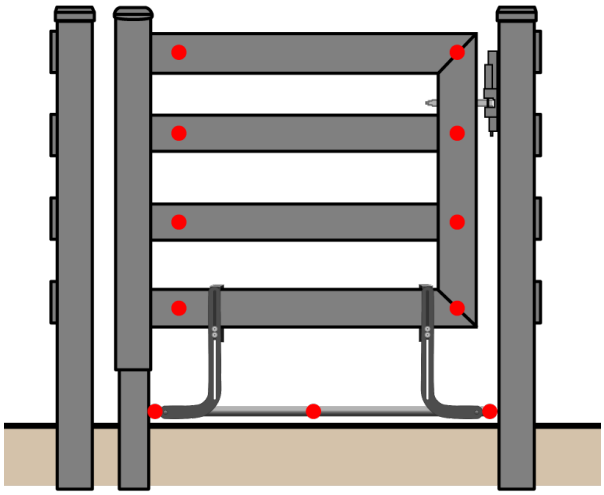

12 Foot Gate Placement

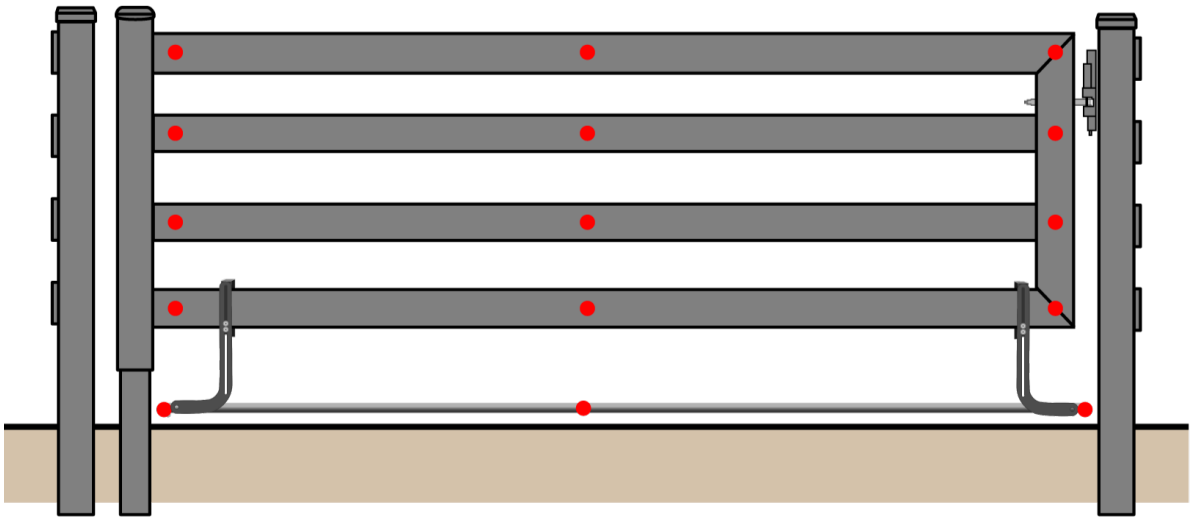

WIRE MESH SYSTEM INSTALL

WIRE MESH SYSTEM FOR BUCKLEY FENCE INSTALLATION INSTRUCTIONS

Our Wire Mesh Clips allow an easy way to add any wire mesh to your Buckley Fence, vinyl, pipe, or any hollow tube fence. We recommend vinyl-dipped wire mesh for abrasion protection on the fence coating and the most striking look.

REQUIRED MATERIALS

1. No. 2 Phillips Driver
2. Step drill
3. Chain link wire mesh; galvanized and black vinyl coated recommended, but any wire mesh will work with this system.

1 DRILLING THE HOLES

1. Drill holes in the posts and rails in accordance with the Wire Mesh diagrams on page 27.
2. Position mesh over the fence in the desired position.

2 INSTALLING THE WIRE MESH CLIPS

1. Insert a Wire Mesh Clip into one of the holes you've just drilled.
2. Mount the wire mesh through the wire mesh clips. Ensure that the mesh is placed in a way that it is controlled vertically and horizontally. Do this by positioning the two teeth that are on the clamshell wash clamp across both a vertical and horizontal wire.
3. Insert the No. 2 Phillips-driver into the drill. Drill Wire Mesh Clip onto the fence. As you drill, the rubber well nut will seal the hole, ensuring no damage to the fence finish.
4. Repeat steps 3-5 for the remaining Wire Mesh Clips.

BOOMERANG BRACKETS

INSTALLING WIRE MESH ON TO GATES USING BOOMERANG BRACKETS

Our steel Boomerang Brackets allow you to extend any wire mesh beneath gates to keep animals from getting underneath. They are vertically adjustable to optimize ground clearance.

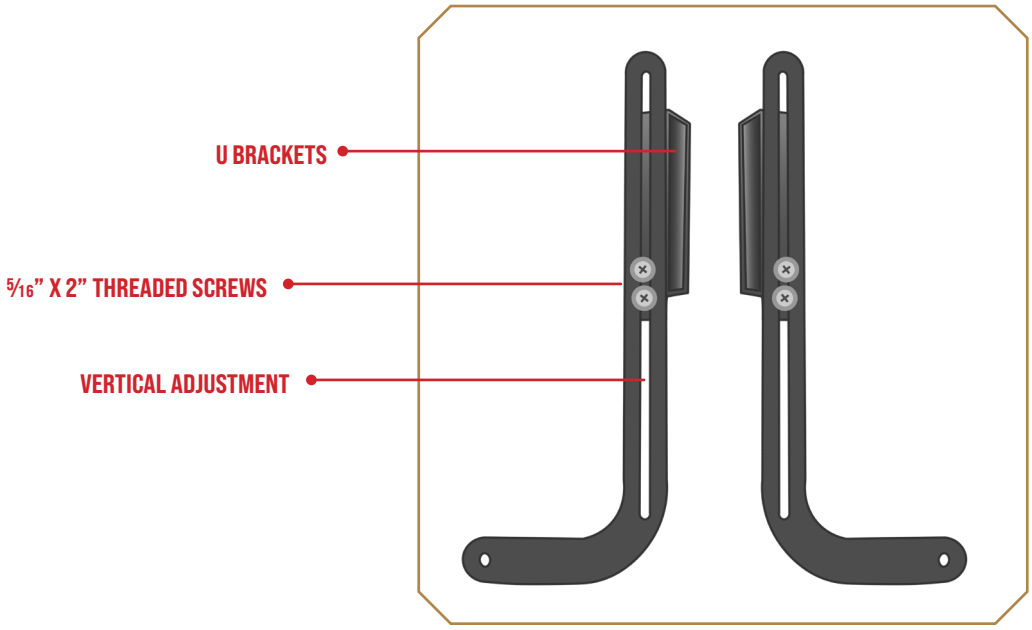

REQUIRED MATERIALS

1. Vertical tension bars
2. 1-3⁄8” chain link tubing with cap ends
3. Two stainless steel 5⁄16” x 2” fully threaded screws with 6 stainless steel nuts
4. Chain link wire mesh; galvanized and black vinyl coated recommended, but any wire mesh will work with this system.

1 BOOMERANG BRACKETS INSTALL

1. Slip the two U brackets over the gate bottom rail as shown with the boomerang brackets facing outward.
2. Adjust the height of the boomerang brackets by loosening the slide screws, and retighten once positioned. Swing the gate to assure this position works without ground interference.
3. Cut the chain link tubing to span the length from one boomerang mount hole to the other with the caps attached.
4. Slide the 5/16” stainless steel screws through the end caps and nut them tightly. Next, put on a second nut, slide through the boomerang bracket hole, and put the third nut at the end. Position the two nuts to securely mount the tube and tighten.

5. Mount the wire mesh to the gate using the Buckley Wire Mesh Clips. Use three clips, top, middle and bottom of the gate on each end. When drilling the half inch holes, be sure not to punch through the other side of the rail. See Wire Mesh Clip Assemblies here.
6. As seen below, use wire ties to fasten the bottom of the mesh to the bottom tubing.
7. Once complete, swing the gate to assure clearance. Adjust, as necessary.

CHAIN LUNK TUBING WITH CAP ENDS

VERTICAL TENSION BAR

HOT WIRE INSULATORS

HOT WIRE INSULATORS INSTALLATION INSTRUCTIONS

Our Hot Wire Insulators can be used to easily add any hot wire or tape to your Buckley Fence, vinyl, or pipe fence. Recommended when using Buckley Fence to contain large draft horses like Fresians and Belgians. For horses, we recommened hot wire across one to two rails. For cattle, apply to top and bottom rail.

REQUIRED MATERIALS

1. Step drill or ½" bit
2. Long #2 Phillips Bit

1 INSTALLING THE HOT WIRE INSULATORS

1. Drill holes using the step drill in the posts in accordance with the Hot Wire diagram below. Center the holes on the post face and with the rail.
2. Mount the hot wire through the hot wire insulator. Ensure that the hot wire is controlled vertically. Do this by positioning the two teeth that are on the clamshell wash clamp across a horizontal wire.
3. Insert the Phillips bit into the drill. Screw the Hot Wire Insulator onto the fence. As you drill, the rubber well nut will seal the hole, ensuring no damage to the fence finish.
4. Repeat steps 2-3 for the remaining Hot Wire Insulators.

HOT WIRE ON GATES

4 Foot & Section Gate Hot Wire Placement

Hot wire insulators do not need to be installed directly to either 4 foot gates or section gates. Install the hot wire insulators as normal on the fence posts.

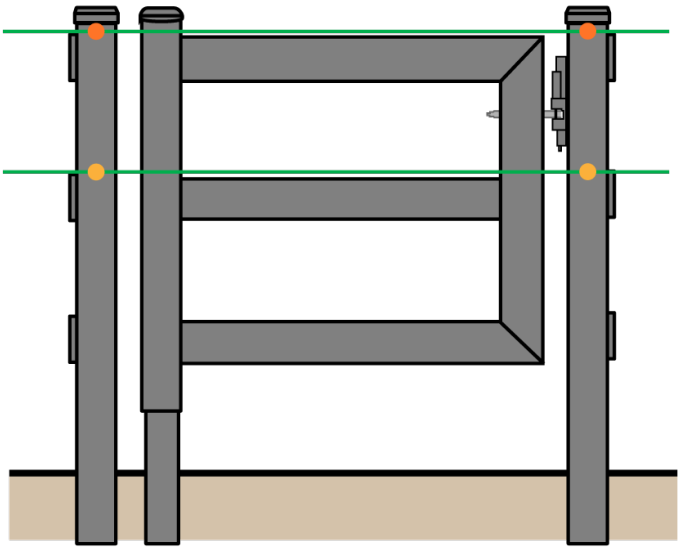

12 Foot Gate Hot Wire Placement

In the case of 12 foot gates, one hot wire insulator should be installed in the center of the gate in order to prevent hot wire from sagging.

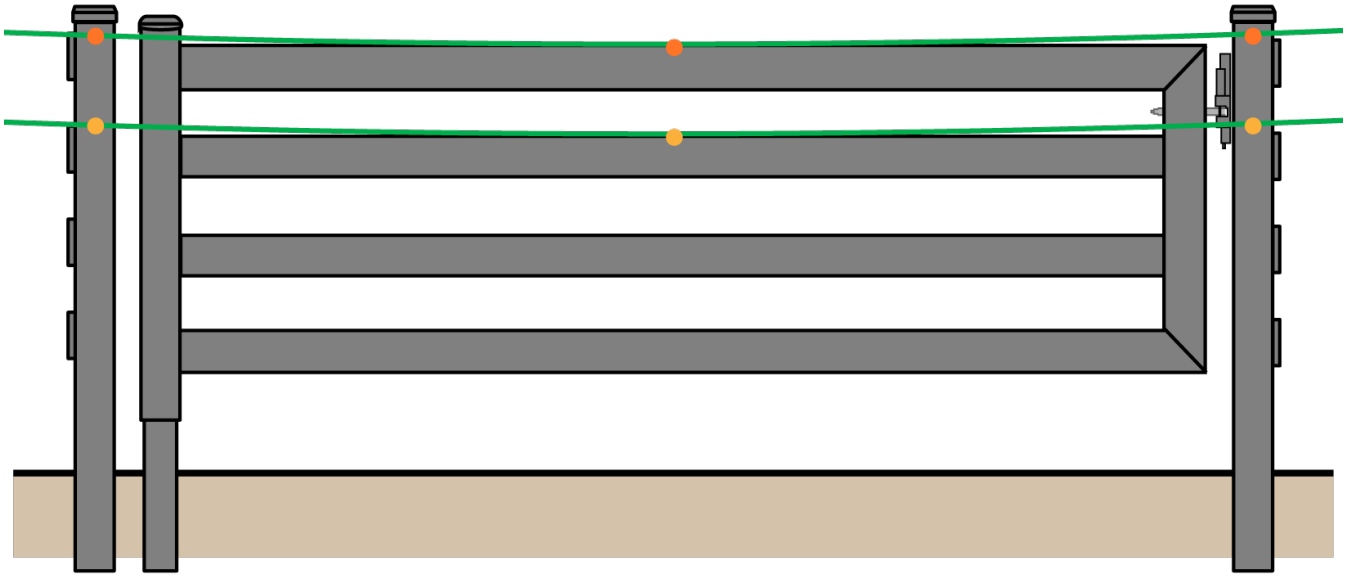

Standard

Optional

ARENA FOOTINGS BRACKET

BUCKLEY ARENA FOOTINGS BRACKET INSTALLATION INSTRUCTIONS

Arena Footing Brackets attach to Buckley Fence to keep expensive footing material contained in arenas. Eliminates the need for wooden boards, and offers more longevity and ease of installation. Buckley offers linear arena footings brackets for straight fence lines as well as angular arena footings brackets for any fence line curvature from a 90 degree corner to a 180 degree straight line. We recommend using our linear footing bracket for straight line runs since they are simpler and lower cost.

REQUIRED MATERIALS

1. Step drill to ½” hole
2. String
3. Marking pen

1 MARKING THE DRILL HOLES

1. Determine what level the top of the footing’s material will be at. String a line down the fence line at this level.
2. Measure 4” above the string and mark the post.
3. Measure 2” below the string and mark the post. These lines will be where you will drill into the post to mount the bracket. On corner posts, drill these holes at the mid point of the post corner radius.

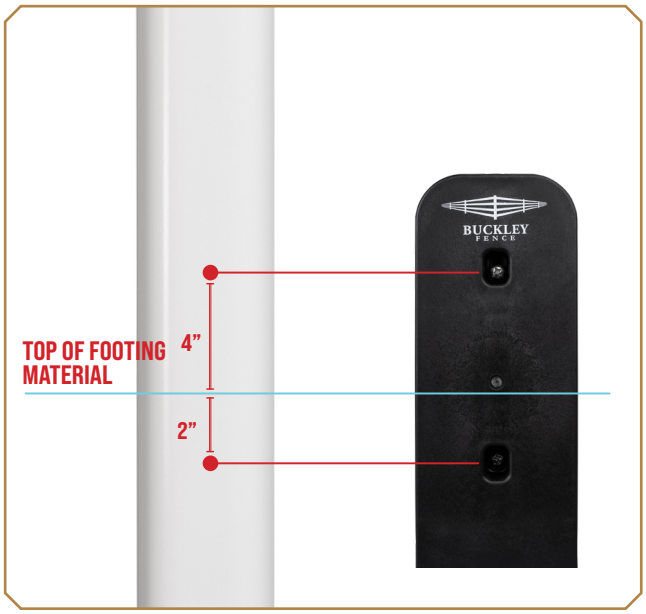

Linear Footings Bracket Figure 1

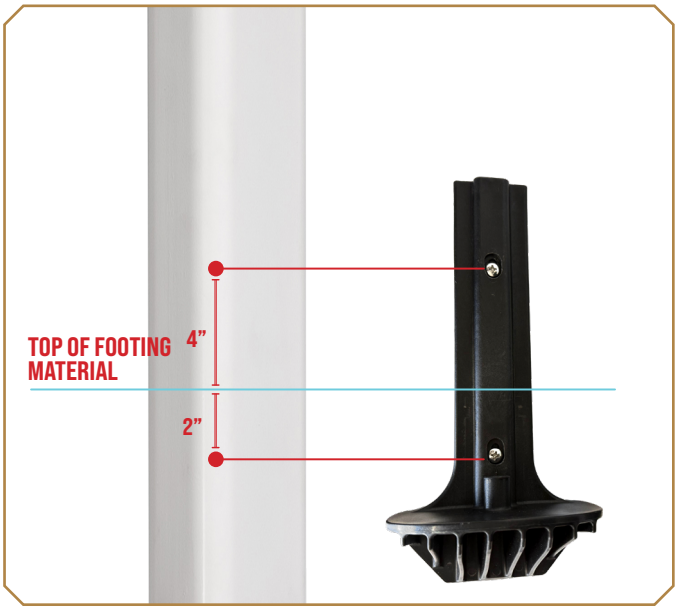

Angular Footings Bracket Figure 2

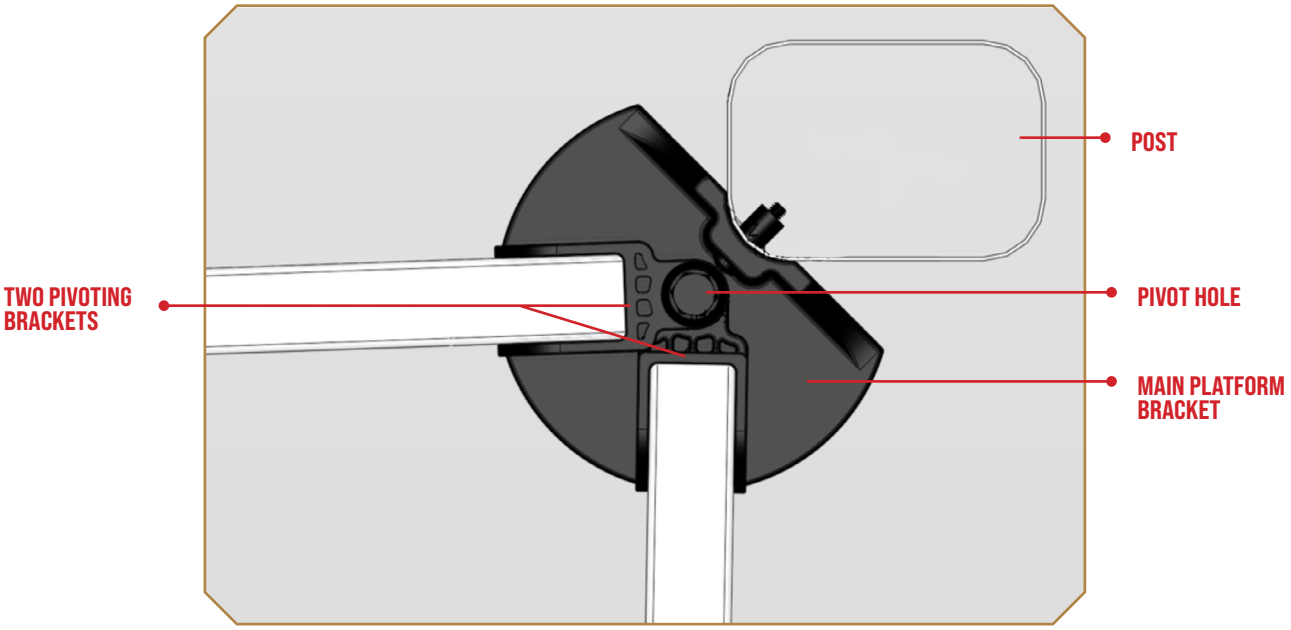

Figure 3

2 INSTALLING THE LINEAR BRACKET

1. Using a step drill, drill one ½” hole on each marked line (4” above top level of footing material and 2” below top level of footing material). Each hole should be drilled approximately on the center of the post face (2 9⁄16” from the edge of the post). (Figure 1) It is okay if the drill walks off the line you measured since the mounting holes are slotted to provide minor adjustments.
2. Once the holes are drilled, insert the rubber well nuts.
3. Place the mounting bracket over the well nuts and insert one of the screws into the top slotted hole. Screw into the well nut; do not tighten down fully.
4. Insert the second screw into the bottom slot on the mounting bracket and tighten fully. Then tighten the top screw fully.
5. Insert rails into brackets from the top, two rails per side. End posts will only use one side of the bracket.

3 INSTALLING THE ANGULAR BRACKET

1. Using a step drill, drill one ½” hole on each marked line (4” above top level of footing material and 2” below top level of footing material). Each hole should be drilled approximately at the center of the post corner radius as shown in the diagram. (Figure 2 & 3) It is okay if the drill walks off the line you measured since the mounting holes are slotted to provide minor adjustments.
2. Once the holes are drilled, insert the rubber well nuts.
3. Place the main platform bracket over the well nuts and insert one of the screws into the top slotted hole. Screw into the well nut; do not tighten down fully.
4. Insert the second screw into the bottom slot on the main platform bracket and tighten fully. Then tighten the top screw fully.
5. Once the main platform bracket is installed on the corner, slide the two pivoting brackets onto the main platform bracket. (Figure 3 & 4)
6. Drop the screw into the pivot hole such that it engages the base. The screw functions as a pivot only and does not require a nut or torquing.
7. Insert the footing rails into the angular brackets from the top. You can use one or two rails for this purpose depending on the height you want the top of the footing material.

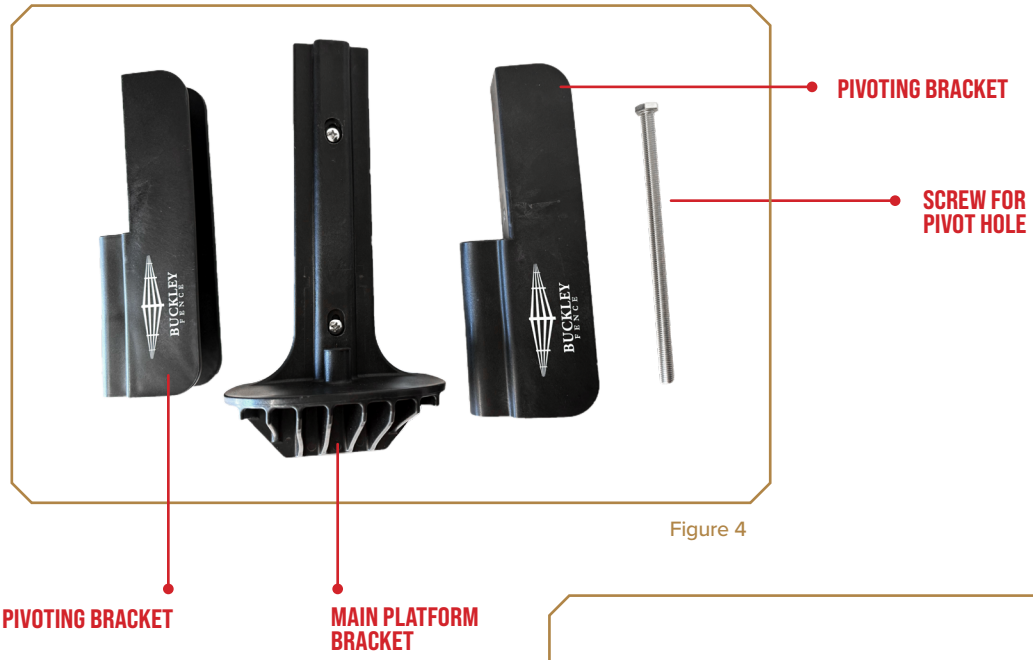

Figure 4

SOLAR LIGHT CAPS

SOLAR LIGHT CAP INSTALLATION INSTRUCTIONS

Our Solar Light Caps are wireless, 100% solar-powered LED lights that mount on our post caps and turn on automatically at night. 450 lumens.

PARTS PROVIDED

Solar Light Cap Kit which includes:

1. Solar Light Cap
2. Mounting bracket
3. Countersunk screws
4. Self tapping screws for wood post (not needed for installation to Buckley Fence)

Buckley Fence provides:

5. Solar Light Mounting Post Cap with pre-drilled holes
6. Self tapping screws for post cap

REQUIRED MATERIALS

1. No. 2 Phillips head Screwdriver
2. Rubber Mallet
3. Towel/rag

1 MOUNTING THE BRACKET

1. Place the pre-drilled cap on the post and tap on it with the rubber mallet until it is fully seated. Cover the post cap with a rag so as not to damage the Mounting Cap surface.
2. Remove the mounting bracket from the Solar Light Cap box and center it onto the mounting cap.
3. Place the self tapping screws provided by Buckley Fence through the slots on the mounting bracket and into the pre-drilled holes on the mounting cap (Figure 2).
4. Snug up the screws with the No. 2 Phillips screwdriver.

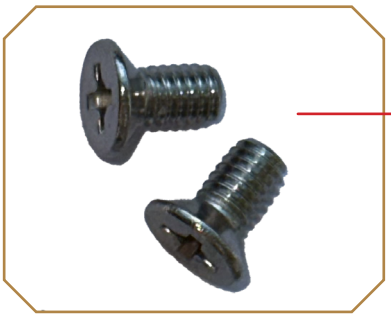

Figure 1

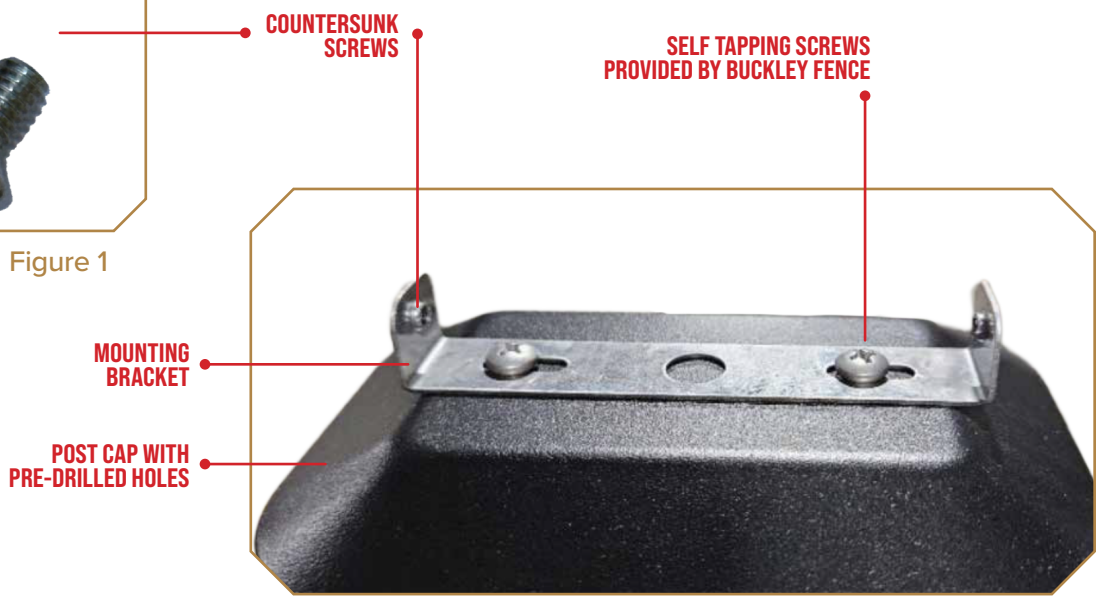

Figure 2

2 MOUNTING THE SOLAR LIGHT

1. Remove the two countersunk screws from the hardware bag. The anchors and self tapping screws in this hardware bag are not needed for this installation and can be discarded.
2. Remove the Solar Light Cap from the box. Press and hold the button found underneath the solar panels (Figure 3) until the lights come on. If the light does not turn on, leave the cap face up so the solar panels are exposed to the sun for at least an hour. After solar charging, press and hold, then release, then press and hold the button again to turn the light on. Lights will flash briefly to indicate the light is on. Lights will turn on automatically at night.
3. Align the two mounting holes on the bottom of the Solar Light Cap (Figure 3) to the holes on the mounting bracket. Place the two countersunk screws into those holes and tighten the screws with the No. 2 Phillips head screwdriver. Repeat these steps for every post getting a Solar Light Cap (Figure 4).

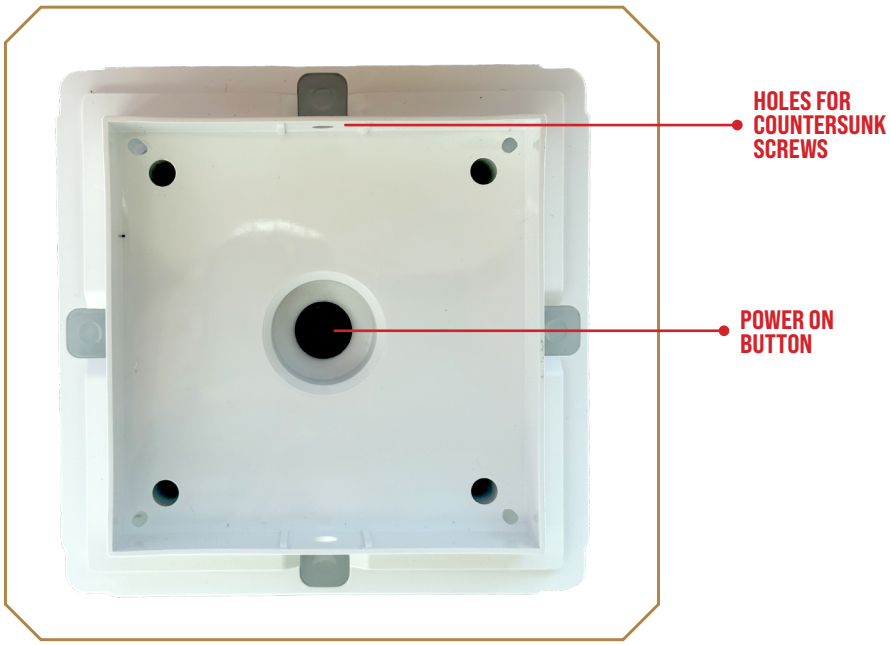

Figure 3

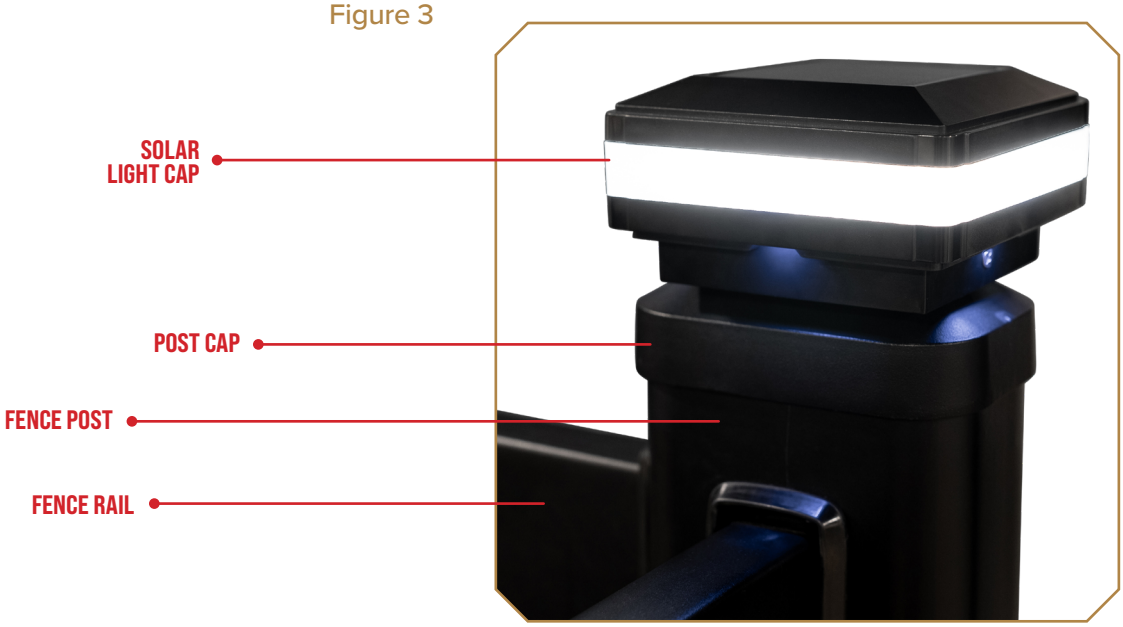

Figure 4

STEEL CRATE END RETURN

INSTRUCTIONS ON RETURNING STEEL CRATE ENDS TO BUCKLEY FENCE

This document will outline the step-by-step process to return your reusable steel crates to Buckley Fence, cutting down on waste and helping us provide sustainable products

PARTS PROVIDED

1. Crate ends (varying number based on size of your shipment)
2. Crate lids (varying number based on size of your shipment)
3. Plastic mats
4. Ratchet straps

1 ASSEMBLING THE CRATE ENDS FOR RETURN

1. Clean crates by removing any mud or dirt.
2. Set aside 4 crate ends with 4 holes on the bottom (Figure 1). This step is important because these ends will function as the top of the crate for your shipment.
3. Take the first crate end and place it with the bottom panel facing down. This will be the base of your crate.
4. If using a ratchet strap, thread it through the bottom center hole of the crate base.
5. Take ten plastic mats from your shipment. Align the handles so they are facing up, then place them inside the crate base. Right align the mats to make space for the other crate end.
6. Flip the second crate end so the bottom panel is facing up (Figure 2). This orientation will allow the two ends to fit together seamlessly. Ensure this crate end has four holes in each corner for the lid.

Figure 1

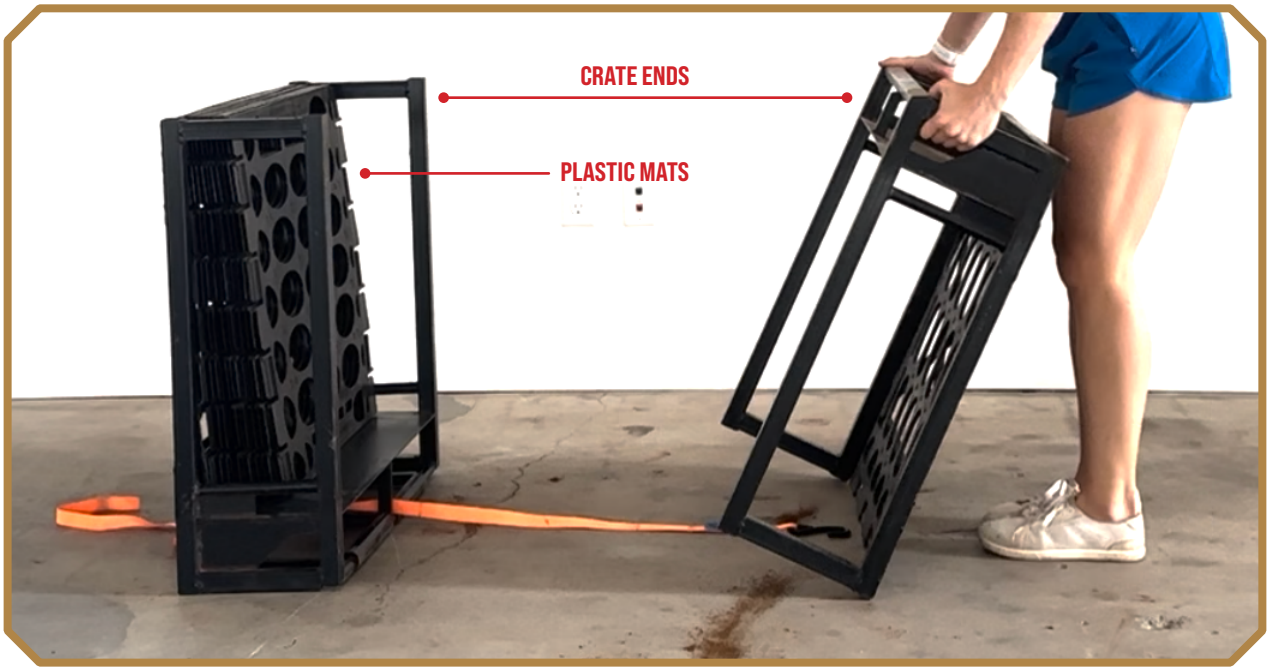

Figure 2

7. Place this crate end directly over the first one, aligning it as shown (Figure 3).
8. Place one lid on top of the assembled crate. Place the other lid inside the crate in addition to the plastic mats. You've now completed one of four crates for this shipment.
9. Repeat the process with the remaining crate ends and plastic mats for crates two and three.
10. Assemble the fourth crate. Instead of plastic mats, place the three extra lids inside. Be careful not to bend the lids. Simply slide the lids into the crate. Each cube should have 8 lids total, 4 on top, and 4 packed inside the crates.
11. Ensure all four crates are aligned and oriented the same direction. Nothing should stick outside of the crates.

Figure 3

12. Tighten the ratchet strap over the top of the shipment (Figure 4).
13. Simply tuck the strap ends into the crate. Do NOT tie knots in the ratchet strap.

Figure 4

2 ARRANGING THE RETURN

- Crates are now ready for return.
- To ensure crate deposit refund, crates should NOT be sent back with the initial delivery truck.
- Buckley Fence will arrange and pay for the shipping for all crates. They must ALL be returned at the same time, along with gate pallets if you have them.
- You must request crate return pickup 3 days before installation is complete.
- Give us a call or send an email to schedule it. Ensure you or the installer is present with a forklift at the time of pickup. The trucking company will not do this for you.
- Once Buckley Fence receives your undamaged crates, bundled correctly, with no missing pieces, you will receive a refund of your original crate deposit.

3 IF MATERIALS ARE DAMAGED

If you ever see damage due to mishandling by the shipping company please do the following:

1. Take pictures of the damaged material while it is still on the truck and before you move it.
2. Do not sign the trucker's bill of lading until you have assessed that the materials have arrived undamaged. If they are damaged, do not sign the bill of lading as there will be no recourse for recovery.

Please refer to our Crate Return Instructional video on our website for more information.
If you have any questions, don't hesitate to call us at 720-644-6884.

GATE PALLET RETURN

INSTRUCTIONS ON RETURNING STEEL GATE PALLETS TO BUCKLEY FENCE

This document will outline the step-by-step process to return your reusable gate pallets to Buckley Fence, cutting down on waste and helping us provide sustainable products.

Your gates are shipped on a varying number of pallets depending on their size. For instance, a 4 ft gate will come on one pallet. An 8 ft gate comes on two pallets. And 12 ft gates come on three pallets. The following steps will still apply to any size gate shipment.

PARTS PROVIDED

1. Gate pallets
2. Hub plates
3. Rail separator plates
4. Ratchet straps

REQUIRED MATERIALS

1. 18 mm or 19 mm wrench
2. 18 mm or 19 mm impact driver

*Some fasteners are 18 mm or ¾”

1 ASSEMBLING THE GATE PALLETS FOR RETURN

1. Remove the plastic pieces from the gate pallets. Set them aside for later.
2. Disassemble your pallets using the wrench and the impact driver (Figure 1).
3. Use the wrench to stabilize the bolt as you use the impact driver. Set aside the hardware for later.
4. Clean your gate pallets, hub plates, and rail separator plates by removing any mud or dirt.

Figure 1

5. Once disassembled, stack the pallets, ensuring that they are aligned. For 4 ft gates, there's no need to disassemble. Simply stack the pallets on top of each other.
6. Rescrew in the hardware to the pallets (Figure 2). Finger tighten the hardware.
7. Use two ratchet straps to secure the pallets, one horizontally and one vertically.
8. Tighten the first strap over the stack. Tuck the ends of the strap into the pallet. Do not tie knots in the ratchet strap. Repeat with the second ratchet strap.

Figure 2

Figure 3

2 ARRANGING THE RETURN

- Gate pallets are now ready for return (Figure 3).
- To ensure gate pallet deposit refund, pallets should not be sent back with the initial delivery truck.
- Buckley Fence will arrange and pay for the shipping. They must ALL be returned at the same time, along with your crates if you have them. You must request a gate pallet return pickup 3 days before installation is complete. Give us a call or send an email to schedule it. Ensure you or the installer is present with a forklift at the time of pickup. The trucking company will not do this for you.
- Once Buckley Fence receives your undamaged gate pallets, bundled correctly, with no missing pieces, you will receive a refund of your original deposit. We hope you're enjoying your new fence!

Please refer to our Gate Pallet Return Instructional video on our website for more information.
If you have any questions, don't hesitate to call us at 720-644-6884.

BUCKLEY
FENCE

Questions?
Give us a call
at 720-644-6884!